www.BibleForChildren.org

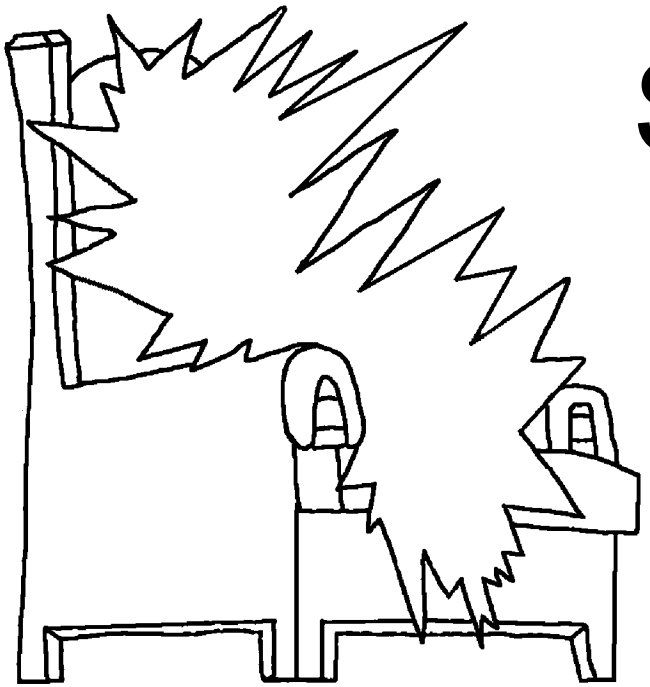

San Juan 14

Yalni Comam Jesús tet ebnaj iscuywom: —Caw mach chicabcon hec'ul, aweco heyanma yiñ Comam Dios cat xin heyanipaxico heyanma wiñan. Bey yatut Inmaman caw ay hamanil bay wal jehi; k'inalo ta machi hamanil tu' xamwalan teyet.

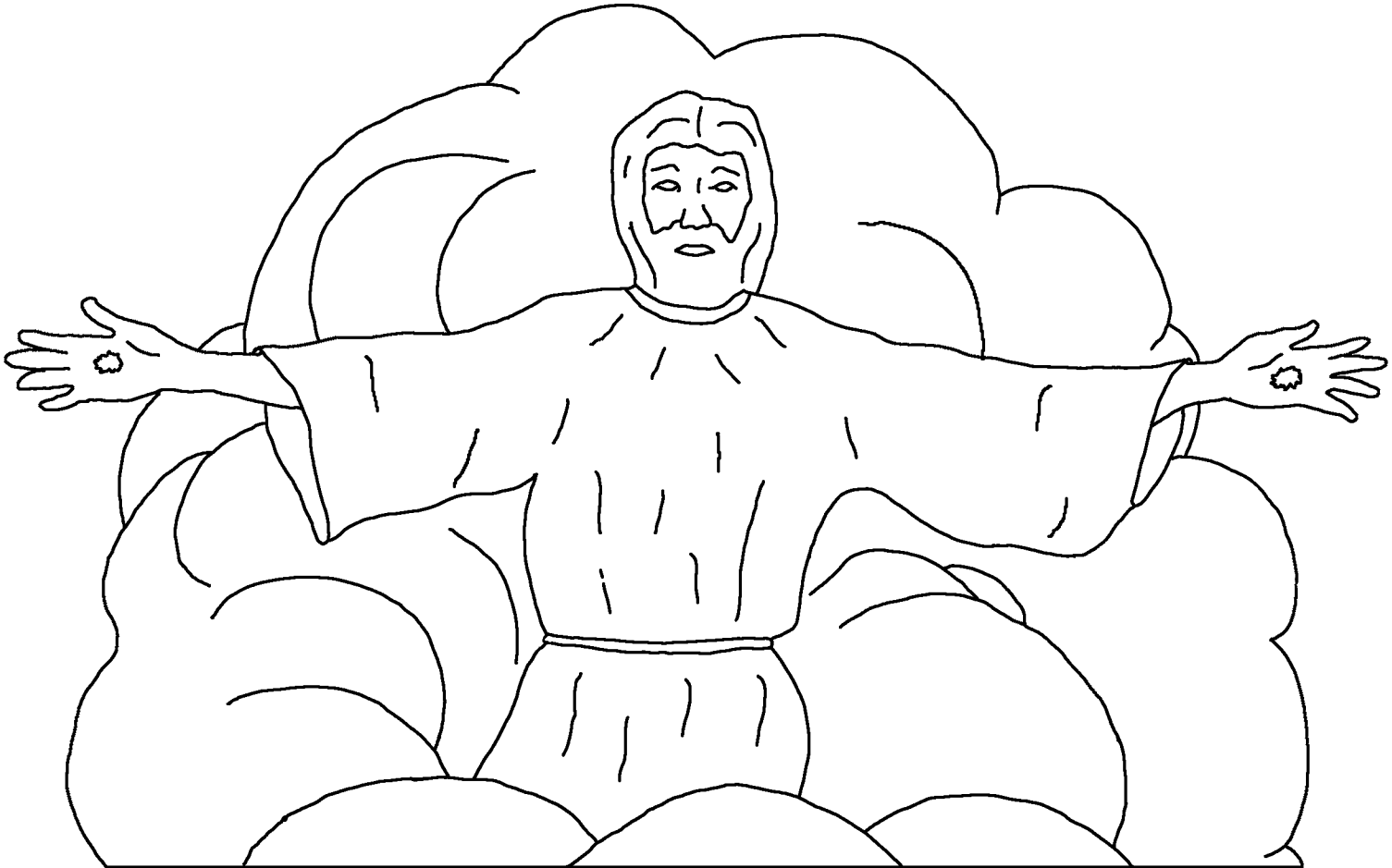

Wal xin caw aya, yuxinto chintohan inwatx'e'an hune' bay chexapni tu'. Yetxa lahwi inwatx'enan bay chexapni, cat xin wulan hunelxa quexwinotojan, haxinwal bay chinehan, ha' tu' chexehpaxoj.

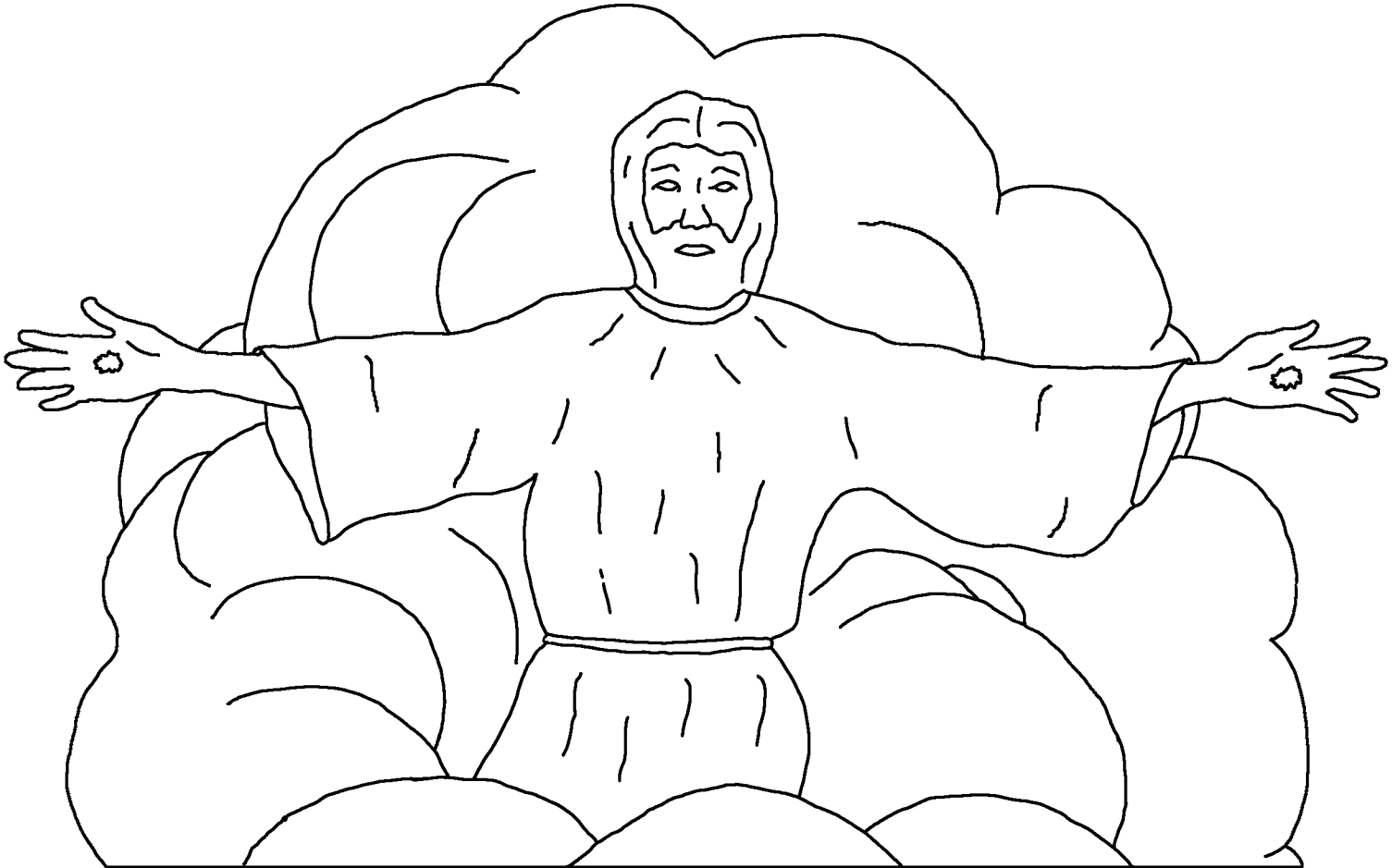

Hanin Juan inti'an, heyuẍta wehan, han-hun-inan chiwabehan isya'tajil yeb hex, yeb xin han-hun-inan chinchahan isnimanbal

inc'ulal teyintaj. Hune'ñe xin choñeh yeb Comam Dios

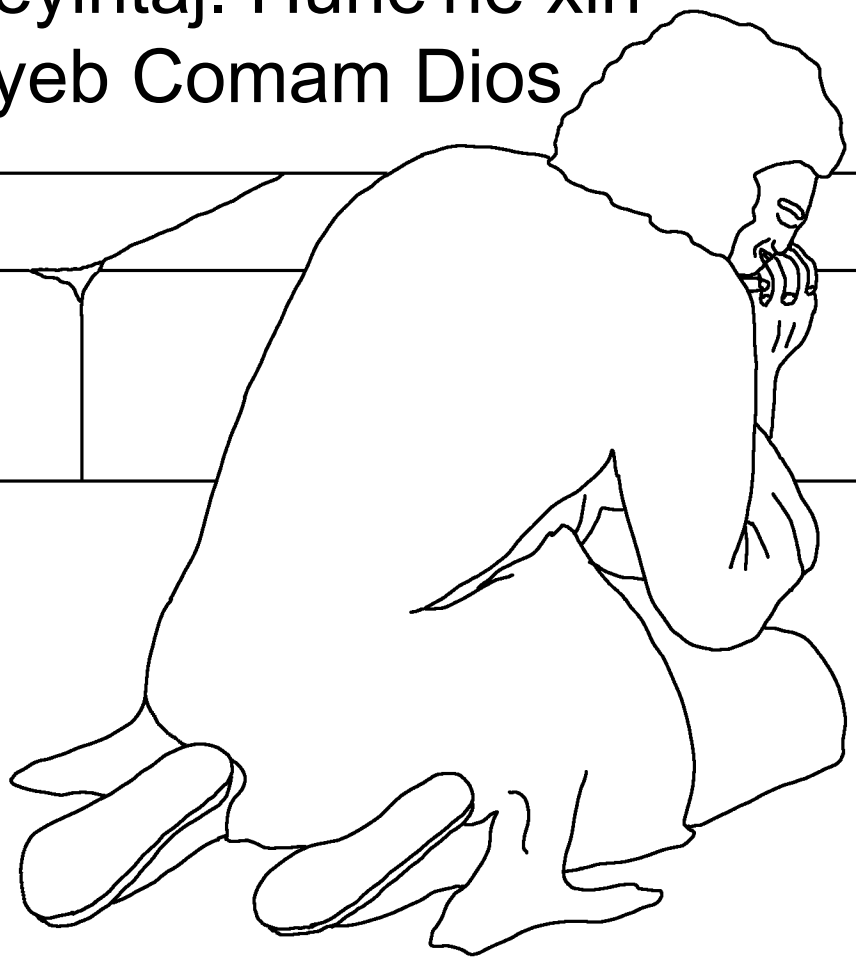

yu ayoñxaco yul isk'ab Comam Jesucristo.

Yet hunel, yet ayinan yul hune' coñob chiyij Patmos, hune' coñob ay xol ha' mar, quinalaxicojan preso yu chiwalic'ojan Istzoti' Comam Dios yeb

tzet iswatx'e Comam Jesucristo.



Yiñ̃ñena tu' wocan yalañ yip Comam Espíritu, wilnihan hune' tz'oñobal yul satcañ, yul hune' tz'oñobal tu' tz'oñan hune' mac.

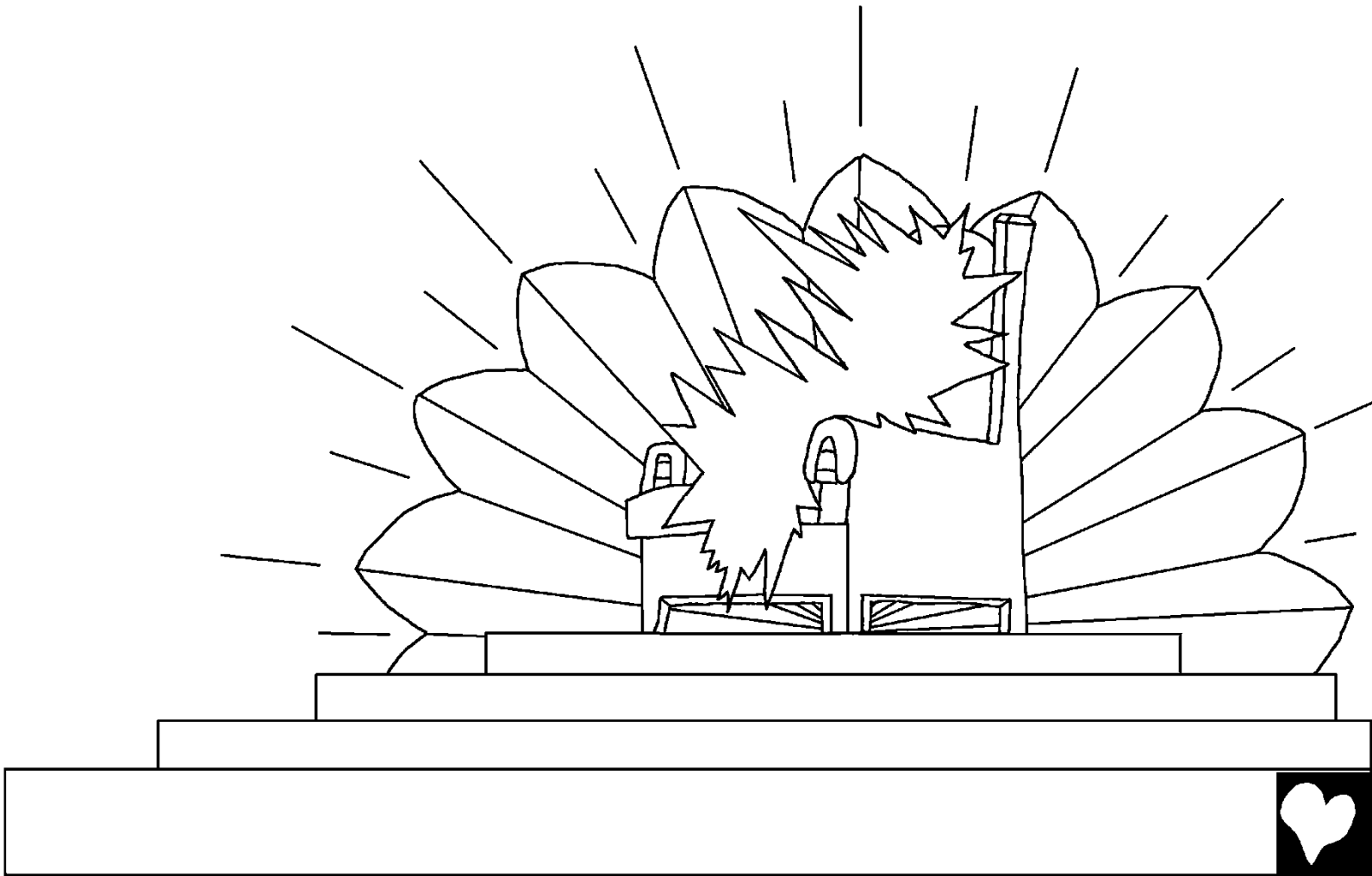

Wabenpaxojan yalni tzet watx'ebil yu Comam Dios yul satcaẅ yeb tzet ay sat tx'o tx'otx' yeb yalaẅ tx'o tx'otx', yeb tzet ay xol ha' mar, chalni haca' ti': Hallaxojab tzoti' c'ul yiẅ Comam tz'oẅanayo yul istz'oẅobal, yeb yiẅ Comam Me' isbi. Hallaxojabi ta caw ay yelapnoj, ta caw ay ismay, ta caw ay yip yiẅ sunilbal tiempo, ẍi.

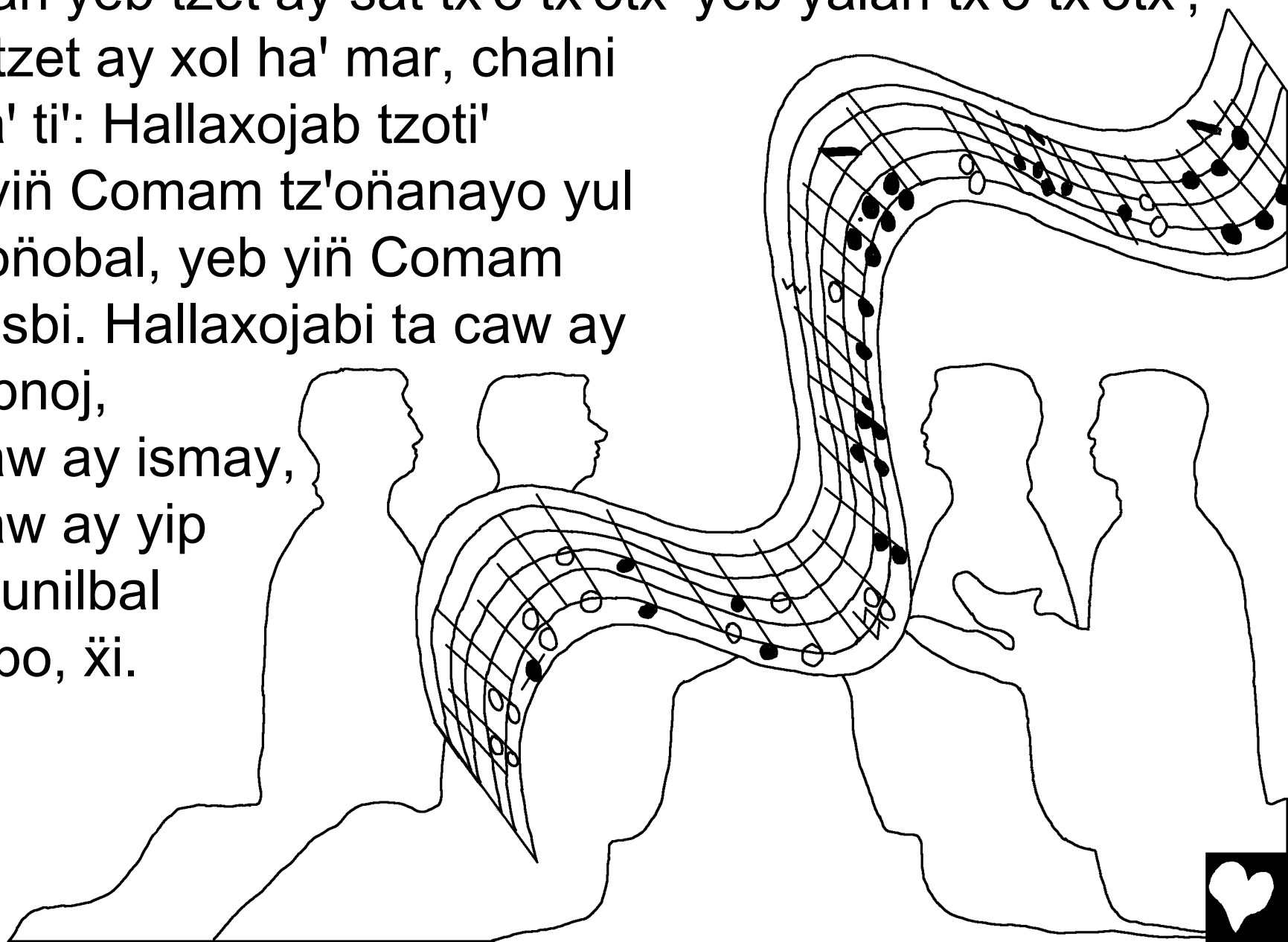

Hanin Juan inti'an wilan iscoñob Comam Dios, ha' ton ac' Jerusalén, wilan istit yul satcañ bay ay Comam Dios. Caw c'ul yehi, haca' hunu ix ix watx'ebilxa isba yuto yocxa yiñ mohyilal yeb naj chiik'ni.

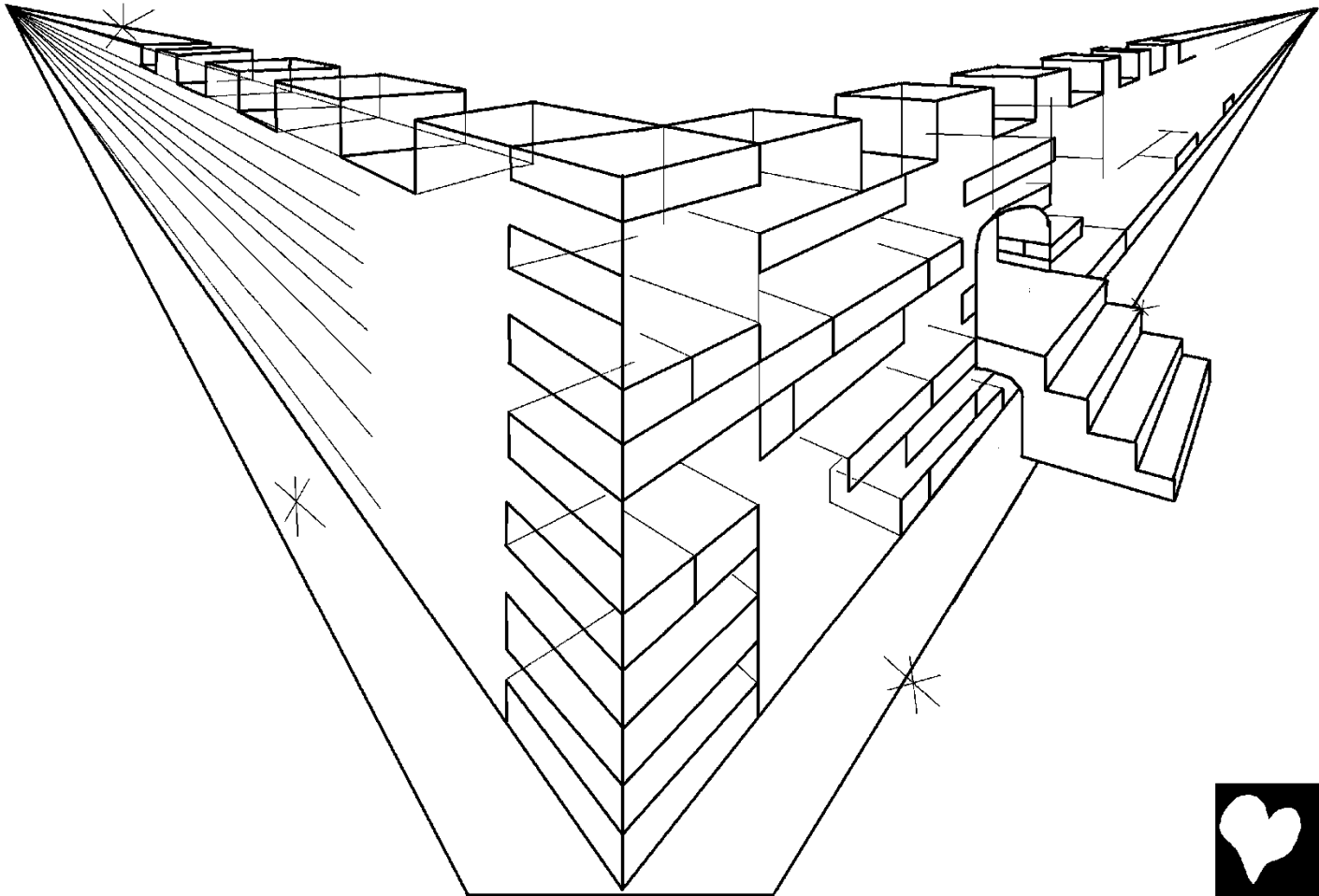

Wabenan hune' yul nuk'e elti bay tz'oñan Comam, yalni yiñ caw ip: —Wal tinañ ayxaco Comam Dios xol anma, chi-xin-cancano Comam xol, iscoñobxa Comam chucanicoj. Chiehayo Comam xol anma, cat yoccano Comam isDiosaloj.

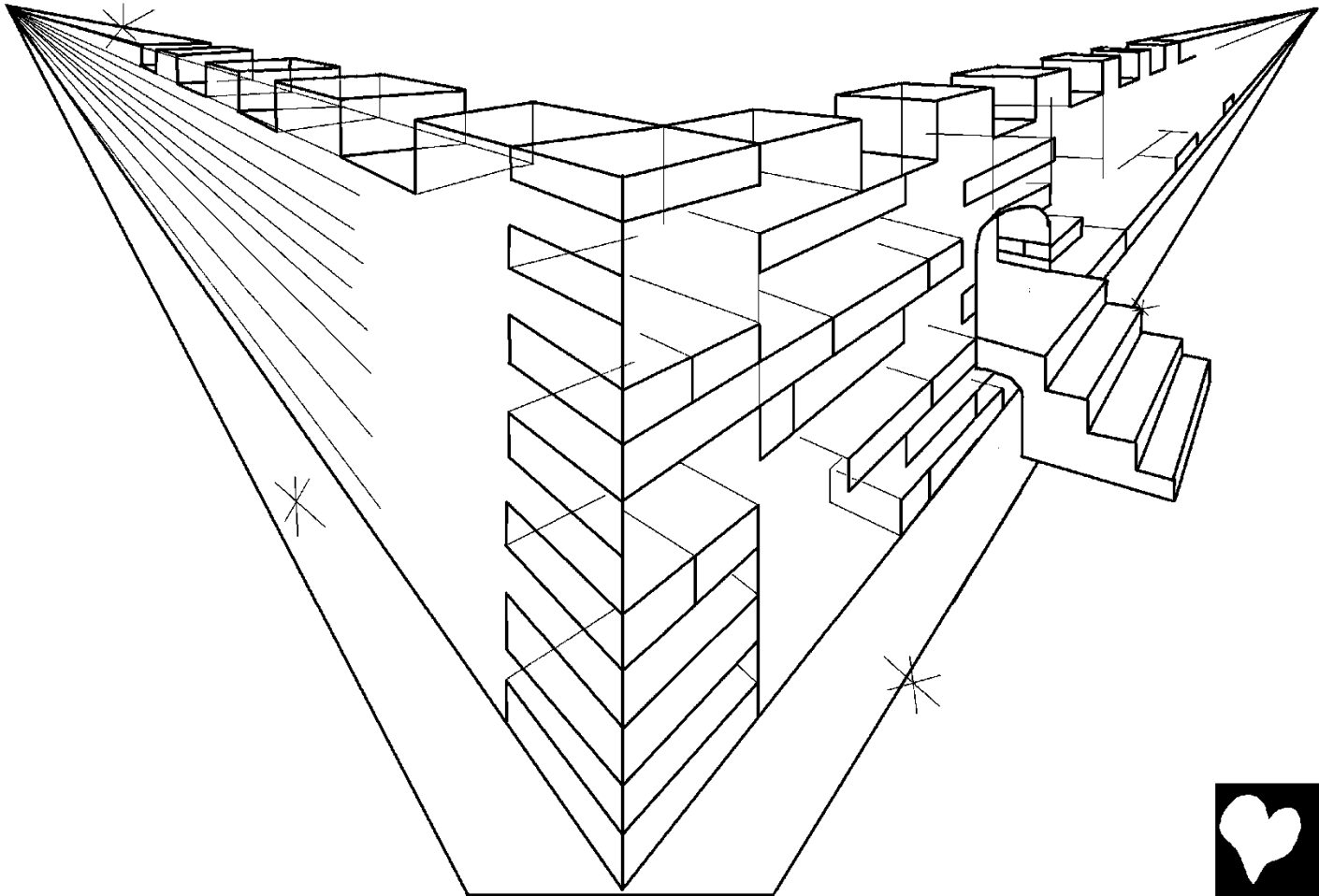

Lahwi tu' isyeni naj ángel hune' ha ha' caw saj wetan, ha' chiak'ni k'inale. Caw xin chik'axpon cosat yul ha' haca' vidrio. Hune' ha ha' tu', ha' bay ay istz'oñobal Comam Dios yeb Comam oc xahanbalil, ha' tu' chitit ha'.

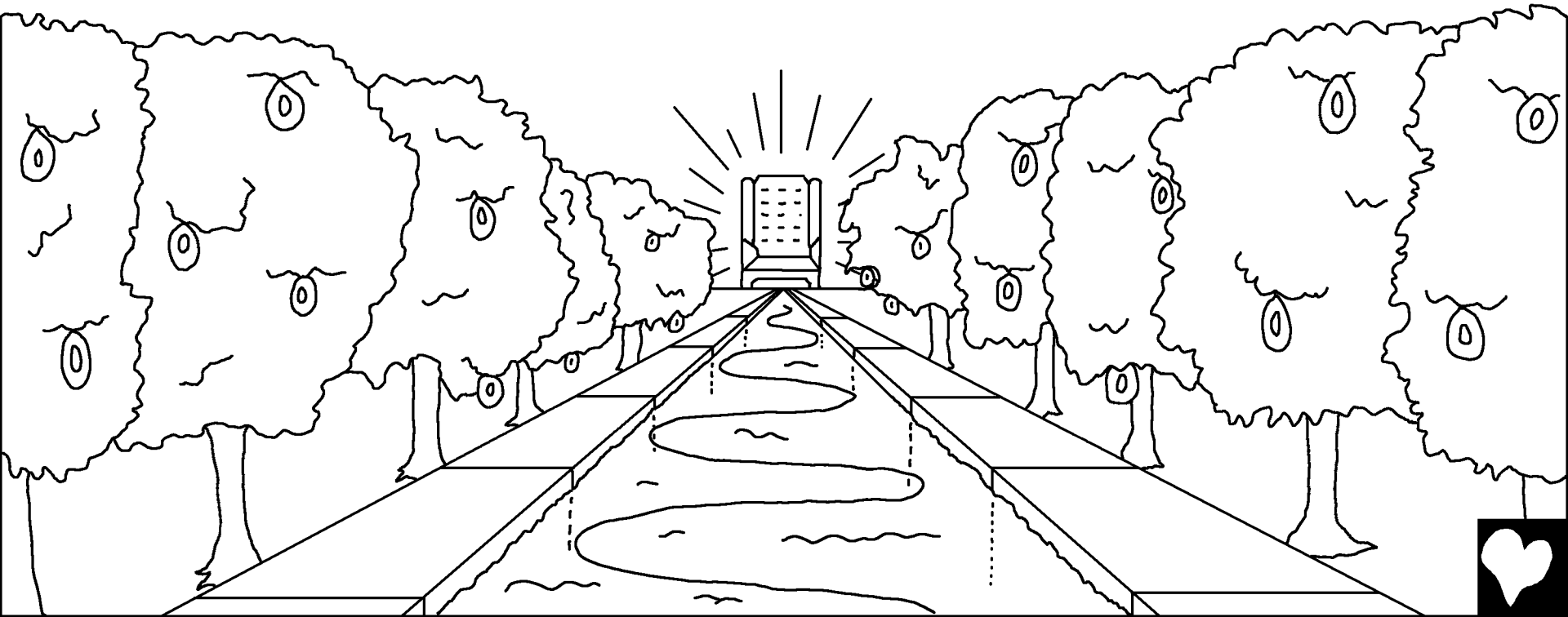

Hune' coñob tu' matxa chiocnico yoj tz'ayic yeb yoj ixahaw yu, walxinto ha' isk'ak'al yip Comam Dios ha' ayayo xol anma, yeb xin Comam oc xahanbalil sajilk'inal Comam.

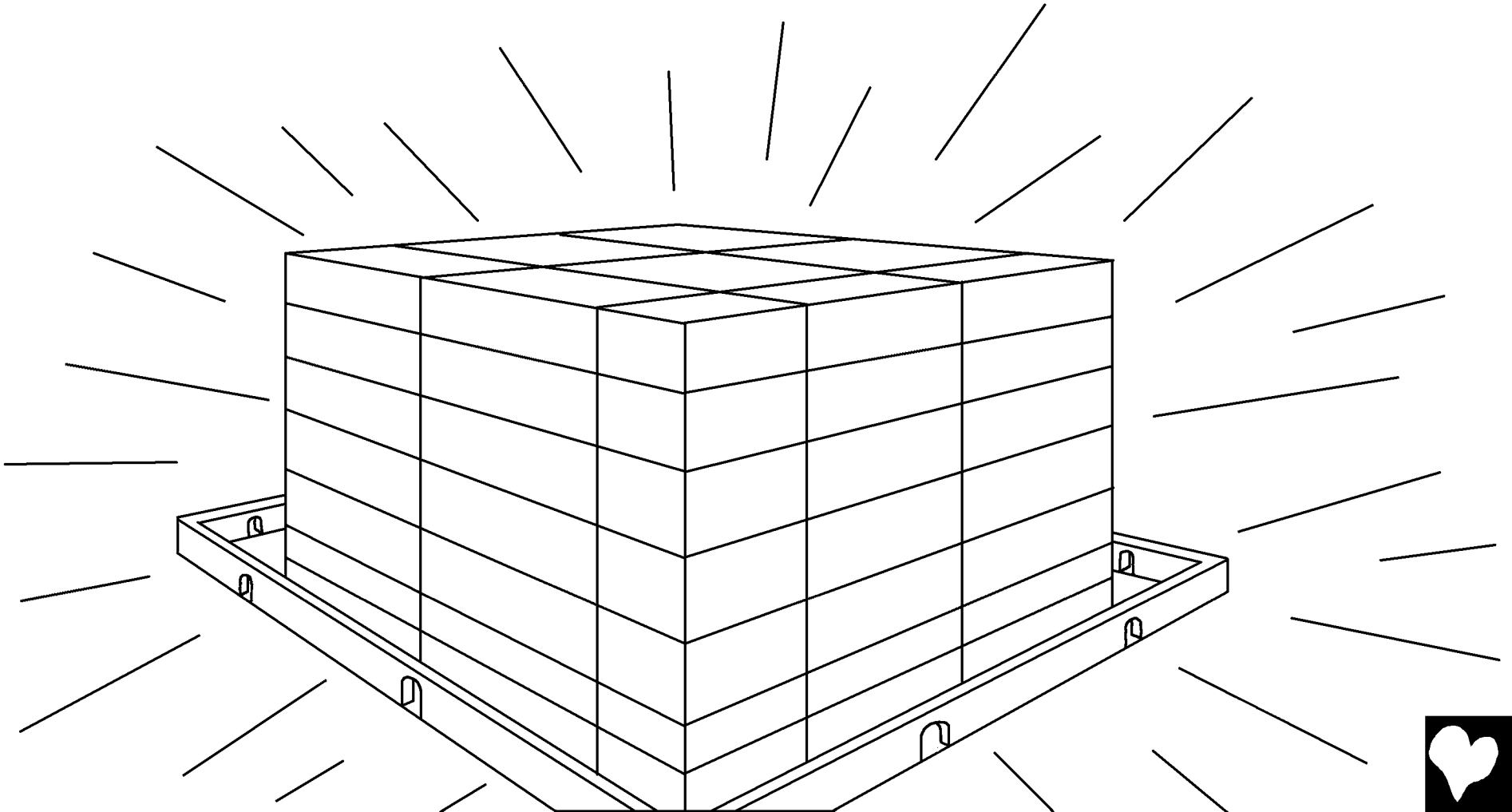

Maẍtic'a nino istx'ojal chiocto bey tu', mach hunu mac chiwatx'en tzettaj chisyah Comam Dios chiapni yul hune' coñob tu', yeb matxa lek'ti'al. Wal xin hañc'añe mac tz'unbilayo isbi yul hum yet k'inale yet Comam oc xahanbalil, ha' chiocto yul hune' coñob tu'.



Ha' Comam xin chisunilo yal sat anma, matxa camical, matxa ok'il, matxa mac chiah isc'ul, matxa isya'tajil, yuto sunil tzet aytic'a yet yalaẅtocanoj, xataẅiloj, ẍi.



Sunil tzettaj ay bey tu' matxa chiay ishowal Comam Dios yibaẅ. Yul hune' coẅob tu' ay istz'oẅobal Comam Dios yeb Comam oc xahanbalil. Sunil ischejab Comam xin chiyiyo isba tet, cat yilnico yiẅ Comam, cat yinic'o isbi Comam
yiẅ ispalaẅ.



Wilnihan anma camnaj liñancañ sata Comam, anma niman yelapnoj yeb anma mach yelapnoj. Ishajlax huntek'an te' hum, yillax yiñ tzet chielico anma camom tu' hatatic'a tzet iswatx'e hunun, haca' yehayo yul huntek'an te' hum tu'. Ishajlaxpaxo te' hum bay ayayo isbi anma ayxa isk'inal yiñ hunelñe. Haxa mac mach ayayo isbi yul te' hum yet k'inale k'ojlaxayto xol hune' niman k'a' tu'.

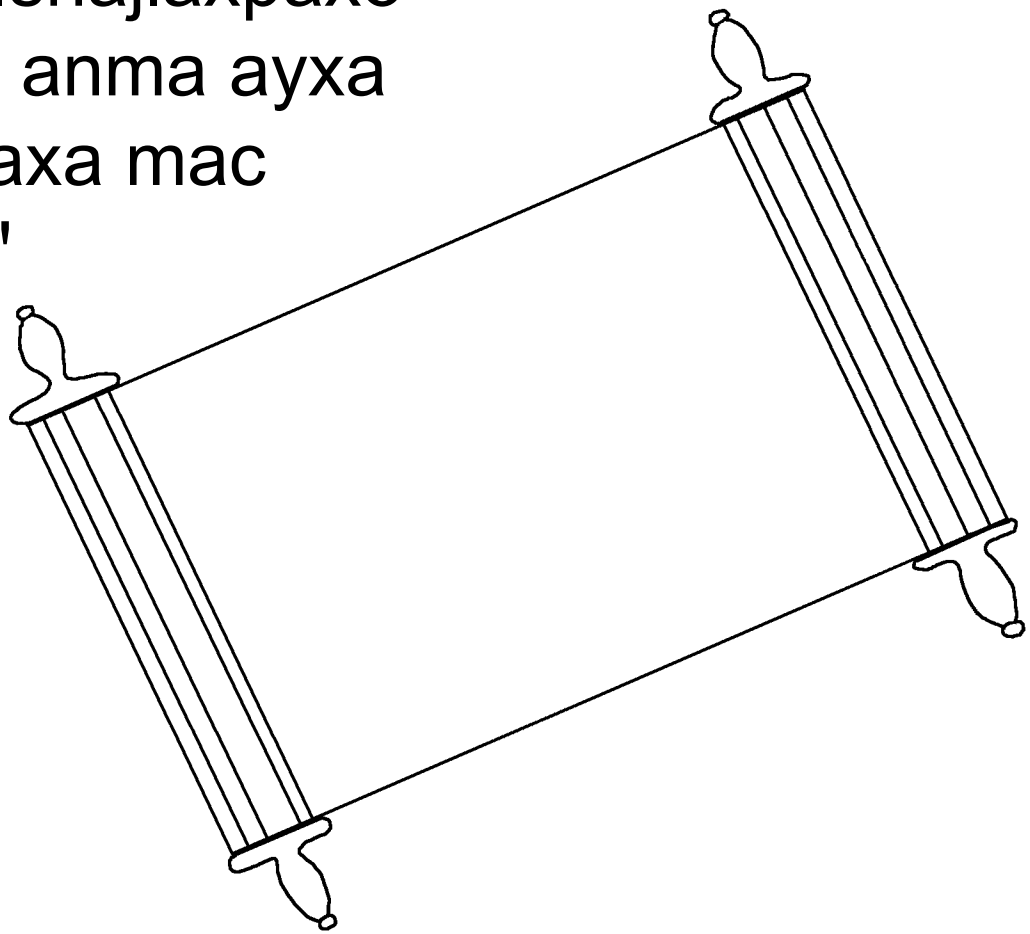

Chal Comam Espíritu Santo yeb yixal Comam oc xahanbalil haca' ti': —¡Hulañ! ẍi. Ha' mac chiaben hune' ti' yalabpaxoj: —¡Hulañ! Ha' mac chitaj isti', tijabi cat yuc'ni ha ha' yiñ matanil, ha' chiak'ni k'inale mach istañbal.

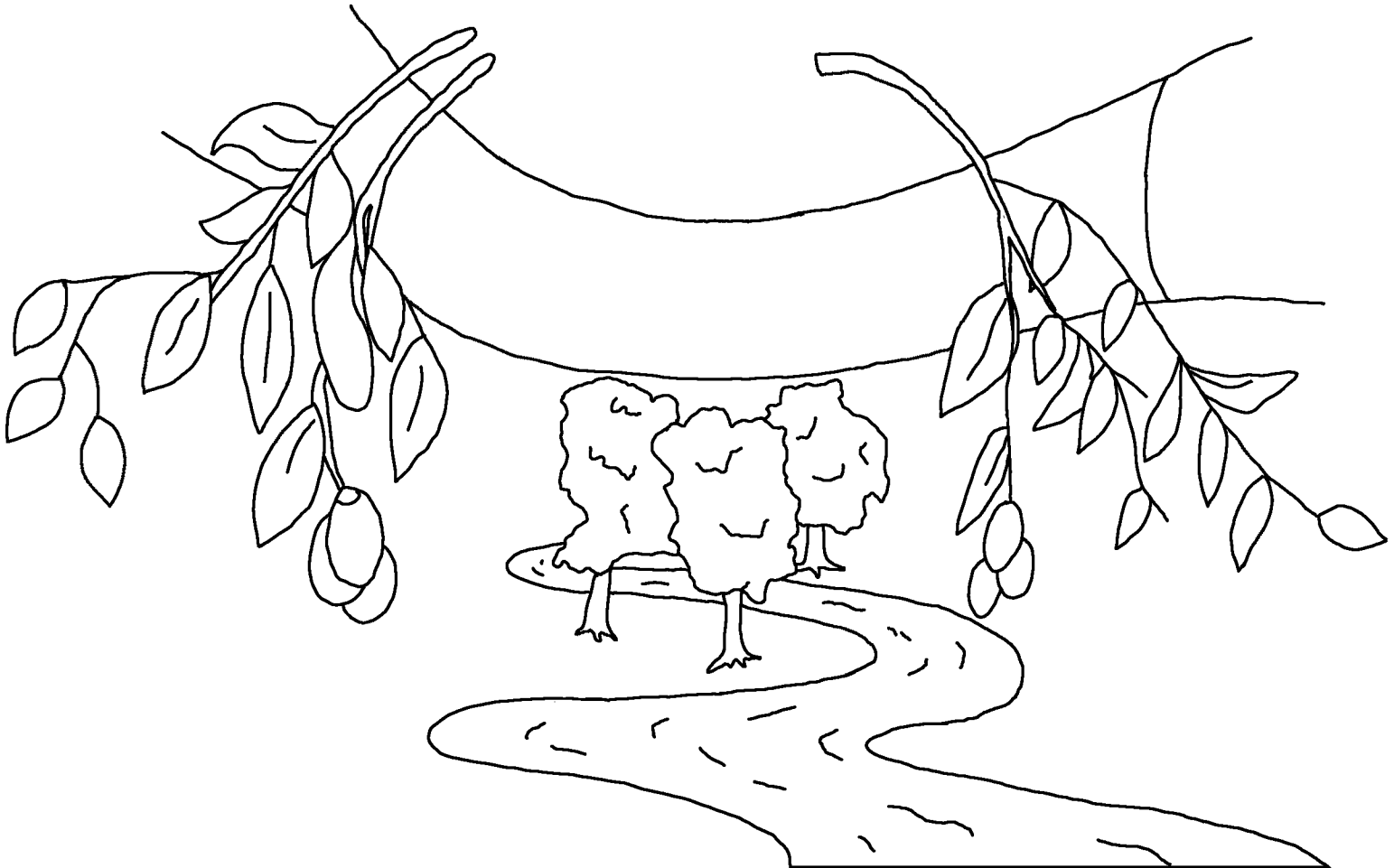

Wal xin, caw xahancano ay anma ay yul sat yibaṅk'inal ti' yu Comam Dios, yuto yati Comam hunpilan Isc'ahol coxol, yuxinto macn̈etic'a chichahni yul yanma, mach chic'aytoj, to caw chischah hune' isk'inal mach istaṅbal.

Romanos 3:23 Mulumoñ cosunil yul sat Comam, yuxin maẍto hunu mac xatzujcha apno isc'ulch'anil Comam yu. Sunil mac yacanico ismul, yuxin nahat yehilo yiñ iscolbanil chak' Comam Dios.

Romanos 6:23 Yuto ha' ispaj selel mule, ha' ton camical mach istañbal, wal issabehal Comam Dios xayak' jet xin, ha' ton k'inale mach istañbal, yuto hunxañe je yeb Comam Jesucristo Jahawil.

Hebreos 9:27 Yuto sunil anma yilal hunelch'an chicami, lahwi tu' cat yillaxi yiñ tzet chielico yul sat Comam Dios.

Efesios 2:8,9 Yuto yu isc'ulal isc'ul Comam Dios, yuxin colbiloñ yu jaco janma yiñ Comam. Maẍtajoñ jichecañ hune' ti', to ha' Comam sañe jet. Maẍtaj yu isc'ulal chicowatx'e yuxinto choñcolchahi, machoj, yuto ta hac tu' chimjal coba c'ulal.

Romanos 10:9,10 Ta chijal yu coti' tato ha' Comam Jesús ha' Jahawil, cat xin janayto yul janma tato yak' itzitzbocañ Comam Dios Comam xol camom, ay cocolbanil chal tu'. Wal xin choñcan c'ulal yul sat Comam Dios yu chijayto yul janma yiñ Comam Jesús, yeb yet chijalni yu coti' ta ha' Comam Jesús Jahawil, cat cocolchacanoj.

San Juan 3:16,17 Wal xin, caw xahancano ay anma ay yul sat yibañk'inal ti' yu Comam Dios, yuto yati Comam hunpilan Isc'ahol coxol, yuxinto macñetic'a chichahni yul yanma, mach chic'aytoj, to caw chischah hune' isk'inal mach istañbal. Haninti'an caw Isc'ahol Comam Dios wehan. Ak'bilintijan yu Comam yul sat yibañk'inal ti', maẍtaj yu wulan wanocojan isya'tajil yibañ anma, machoj, to yu incolnihan yalañ ismul.

1 Juan 5:11-13 Hune' tzet chal Comam Dios, ha' ton cok'inal mach istañbal chak' Comam; caw xin yiññe Isc'ahol Comam ay hune' k'inale tu'. Yuxin ha' mac xaischah Isc'ahol Comam Dios yul yanma, caw ay hune' isk'inal mach chitañi. Yaj wal mac machi Isc'ahol Comam yul yanma xin, machi hune' isk'inal tu'.
Hex chahbilxa Isc'ahol Comam heyu, chintz'ibñetojan hune' carta ti' teyet yuñe heyohtañeniloj tato ay hek'inal mach istañbal.

San Juan 14; 2 Corintios 5;
Apocalipsis 4, 21, 22

Storyline by: Edward D. Hughes

Illustrated by: Lazarus
and Alastair Paterson

Adapted by: Sarah S.

Jakalteko, Eastern Bible (jac) © 1997, Wycliffe Bible Translators, Inc. All rights reserved.

https://live.bible.is/bible/JACWBT/MAT/1

©2026 Bible for Children, Inc.
www.M1914.org www.bibleforchildren.org