www.BibleForChildren.org

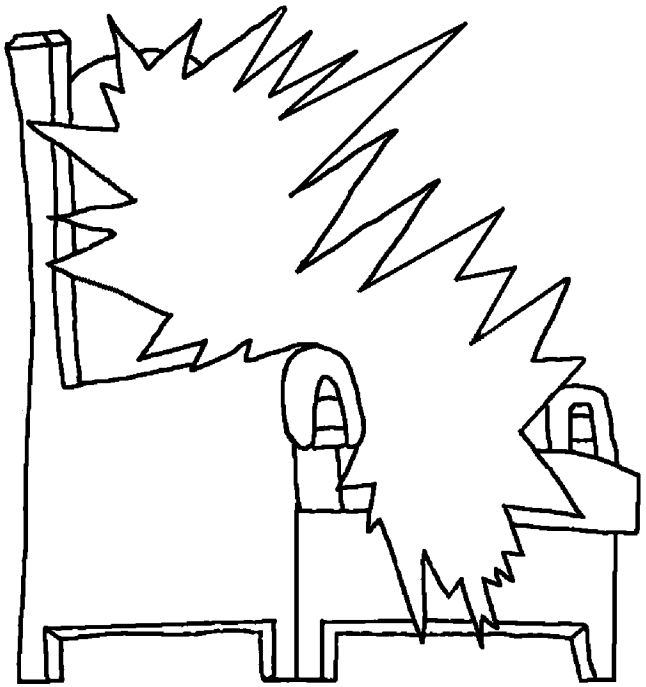

Ioaanes 14

Iesu i piri taan diat naa, “Koku i laklagon a nuknukimuaat, muaat a nurnur un God, ma muaat a nurnur kaai un iaau. Mongoro na kukur ra ruma u ra ruma anun Tamaang. Baa pate, ang wapua muaat utkaai uni. Io, mi ang waan kupi ang waninaar taa a pakaana kup muaat.”

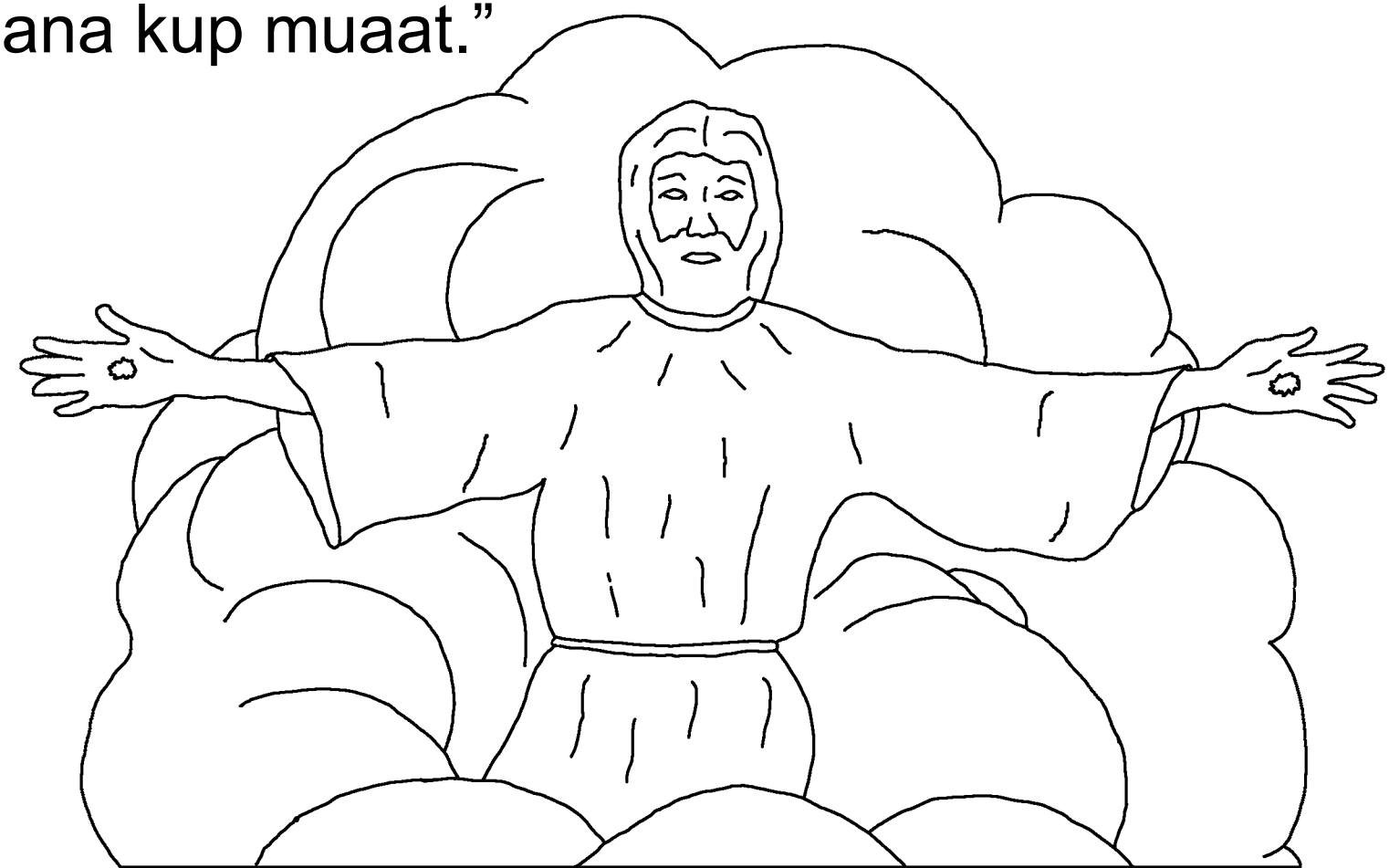

“Baa iaau aa waninaar taa a pakaana kup muaat, ang waan talili balet, ma ang ben pa muaat karom iaau, kupi muaat kaai muaat a ki u ra taamaan baa iaau ki iaai.”

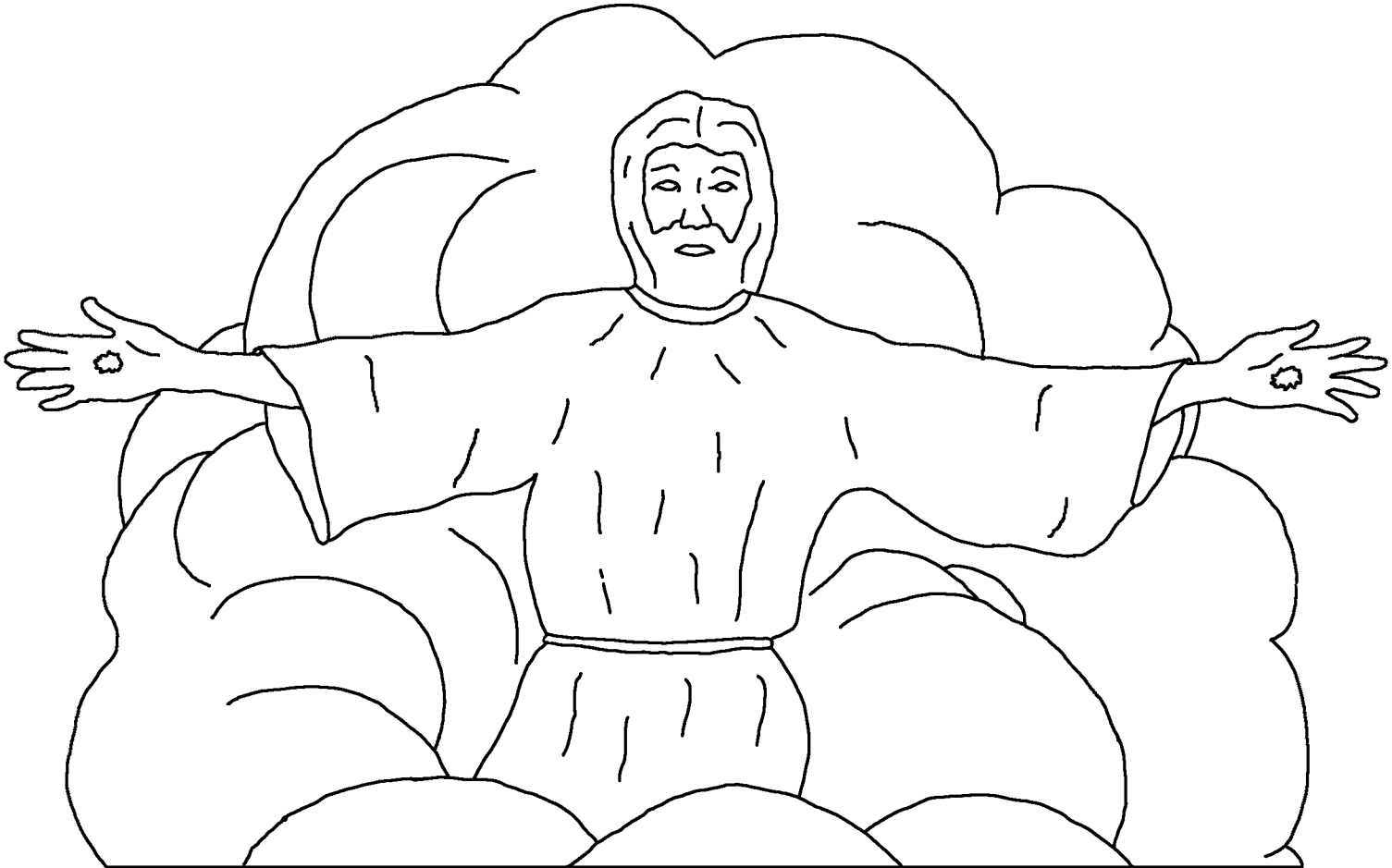

Iaau Ioaanes, a teimuaat ma a tepaamuaat baa daat tur ungaai ma Iesu u ra kinadik, ma u ra nuna mataanitu ma u ra tinur dekdek baa daat kariaana ngununguṭ. Iaau ki na karabus u ra lolo



Paatimos, kabina maa iaau warawaai ma ra pirpir anun God, ma ra wewapua kaapa anun Iesu.

Io, iaau teng maut ma ra Takado na Nion. Ma namuga taang, iaau babo a kiki na king inaanga u ra maawa, ma raa i ki taau uni.

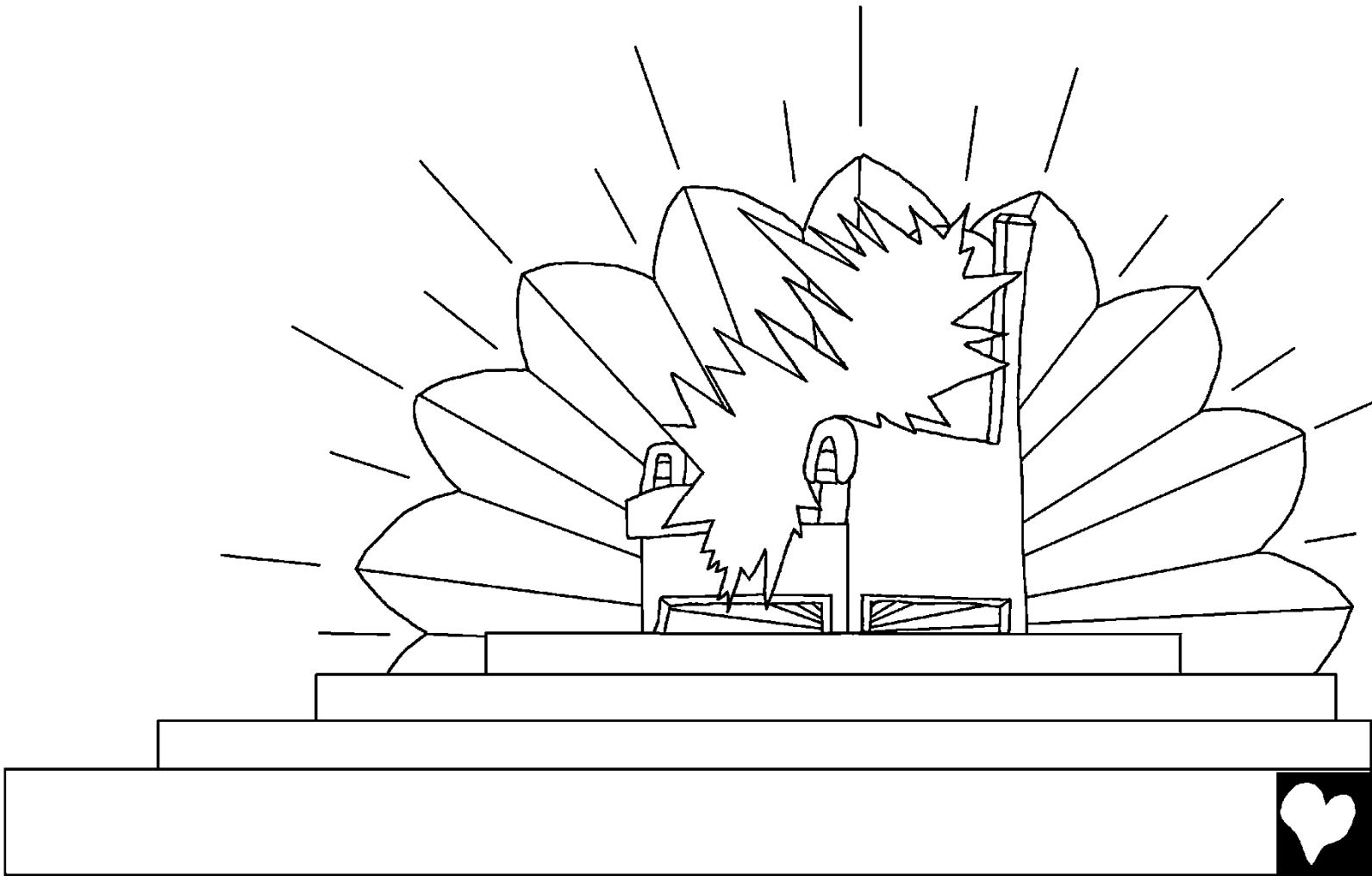

Ma iaau walangoro a kum ingaa ra kum wawaki raap inaanga u ra maawa ma u ra rakrakaan buaal ma nabalaa ra rakrakaan buaal ma nabalaa ra pakaana taai, a kum utnaa raap baa di waki diat, diat kelekele lenbi, Karom ia baa i ki u ra kiki na king, ma karom a Naat na Sip, din pir walaawa pa diaar, din ru diaar ma din wangaala pa diaar.

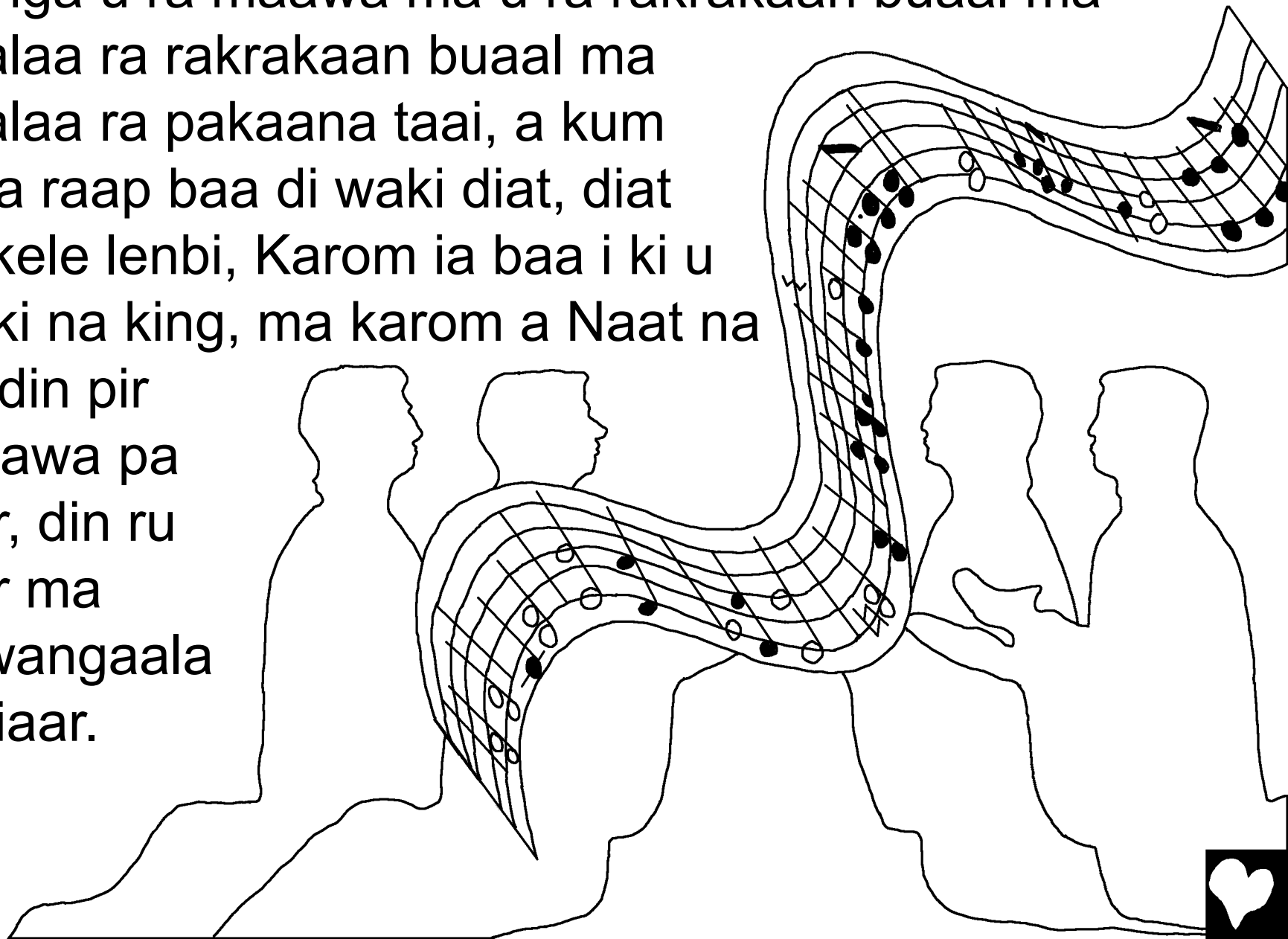

“Karom ia baa i ki u ra kiki na king, ma karom a Naat na Sip, din pir walaawa pa diaar, din ru diaar ma din wangaala pa diaar. Ma diaar a paam akoto a dekdek, pa in raap ma pa in raap.”

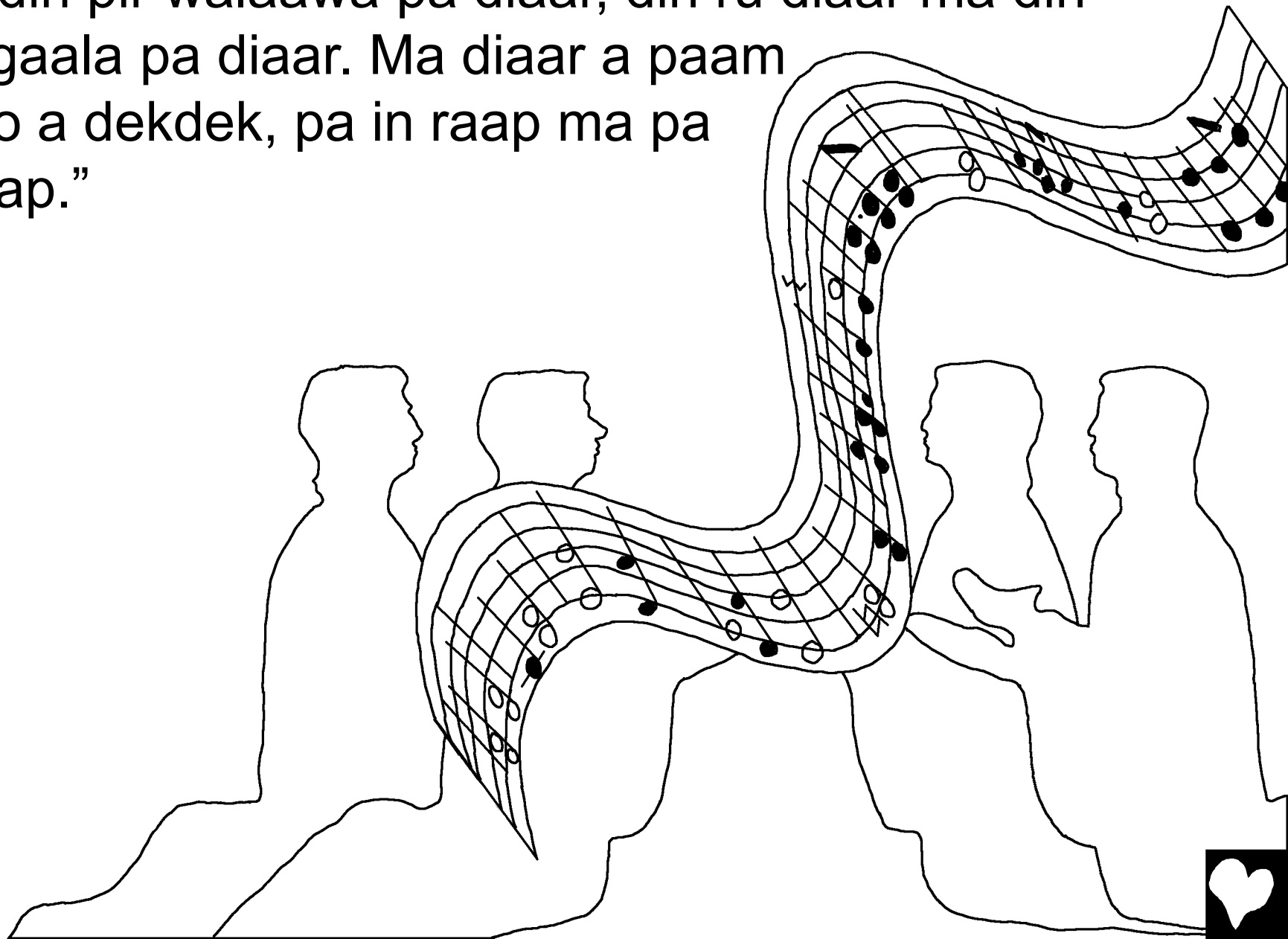

Ma iaau babo a matakina Ierusalem, a gomgom na taamaan anun God, i waan pari taanginaanga ura maawa kon God. Di aa waninaar taai welaar ma di aa wamong wakaak taa a matakina tinaulaa, a tauraara na tabuan kup anuna muaana. Ma iaau walangoro ina ngaala na ingaan raa taanginaanga u ra kiki na king i piri naa, “Baboi, a taamaan anun God ia ki karom a taara, ma ia ut in ki ungaai ma diat.”

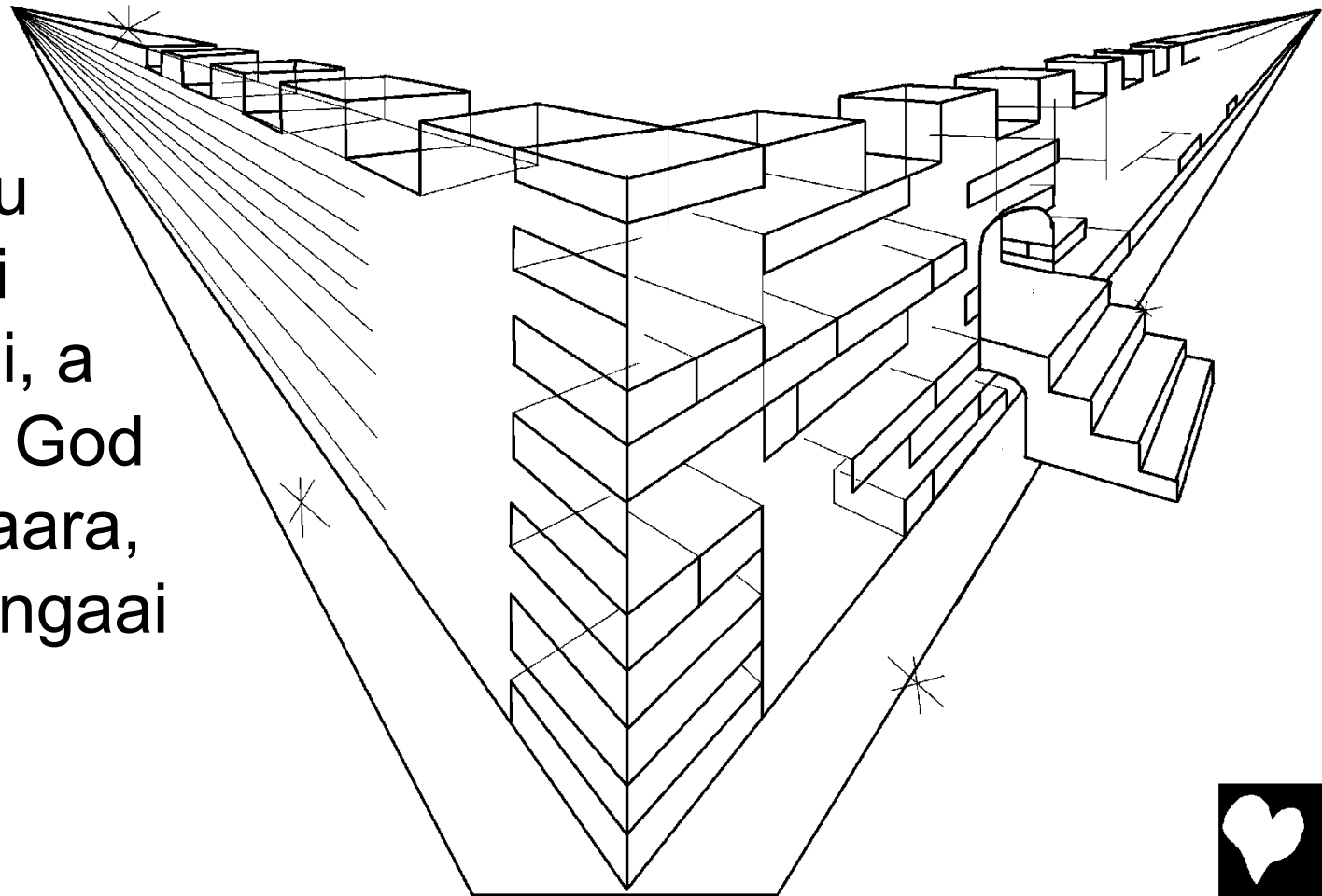

“Ma diat anuna taara, God in ki ungaai ma diat, ma ia ut in God anundiat.”

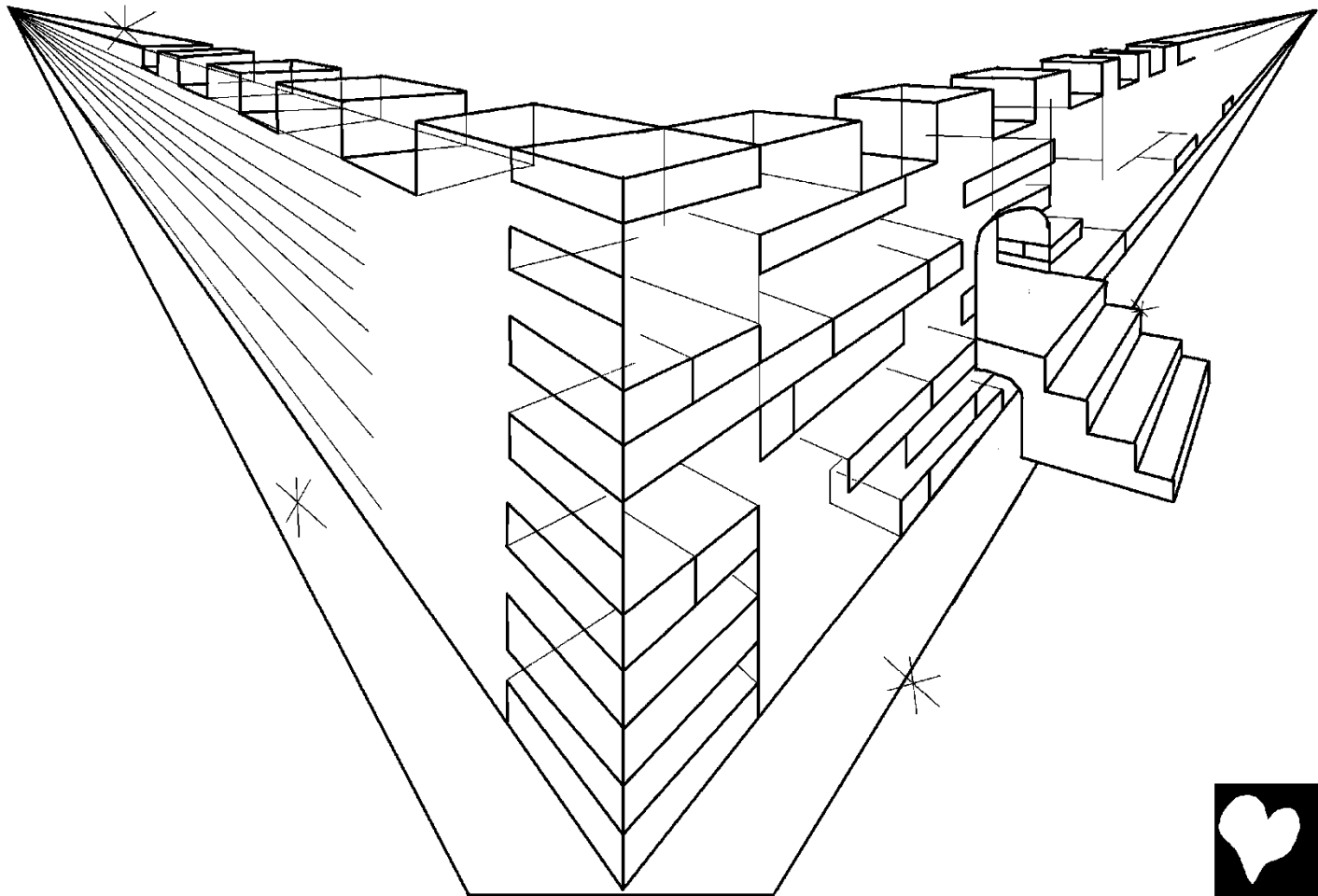

Io, aangelo i waiaa taa a daanim na lalaaun karom iaau, i kaapakaapa welaar ma ra galaas. I aalir paat ko ra kiki na king anun God, anundiaar ma ra Naat na Sip.

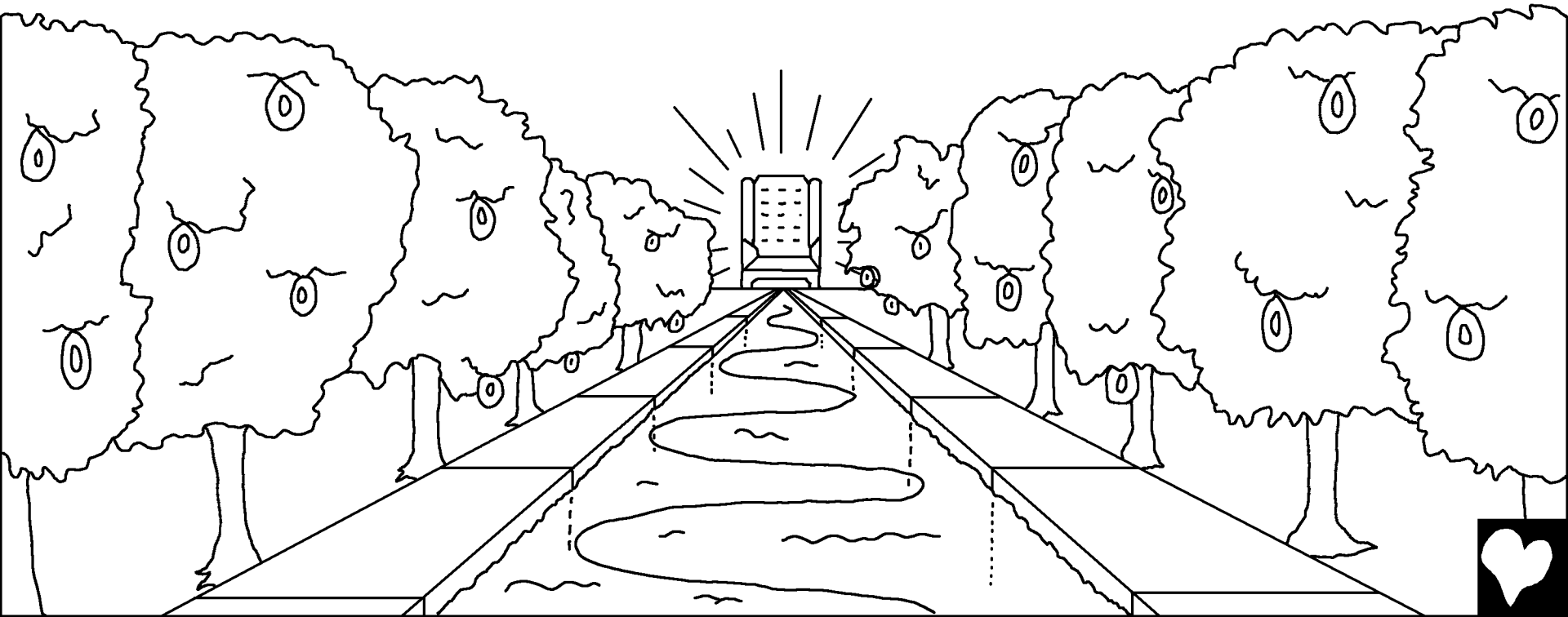

A taamaan maa pa i iba kup in mage ma ra kalaang kupi diaar a wakaapai, maa a minamaarin God ut i wakaapai, ma a Naat na Sip ia ut maa a laam uni.

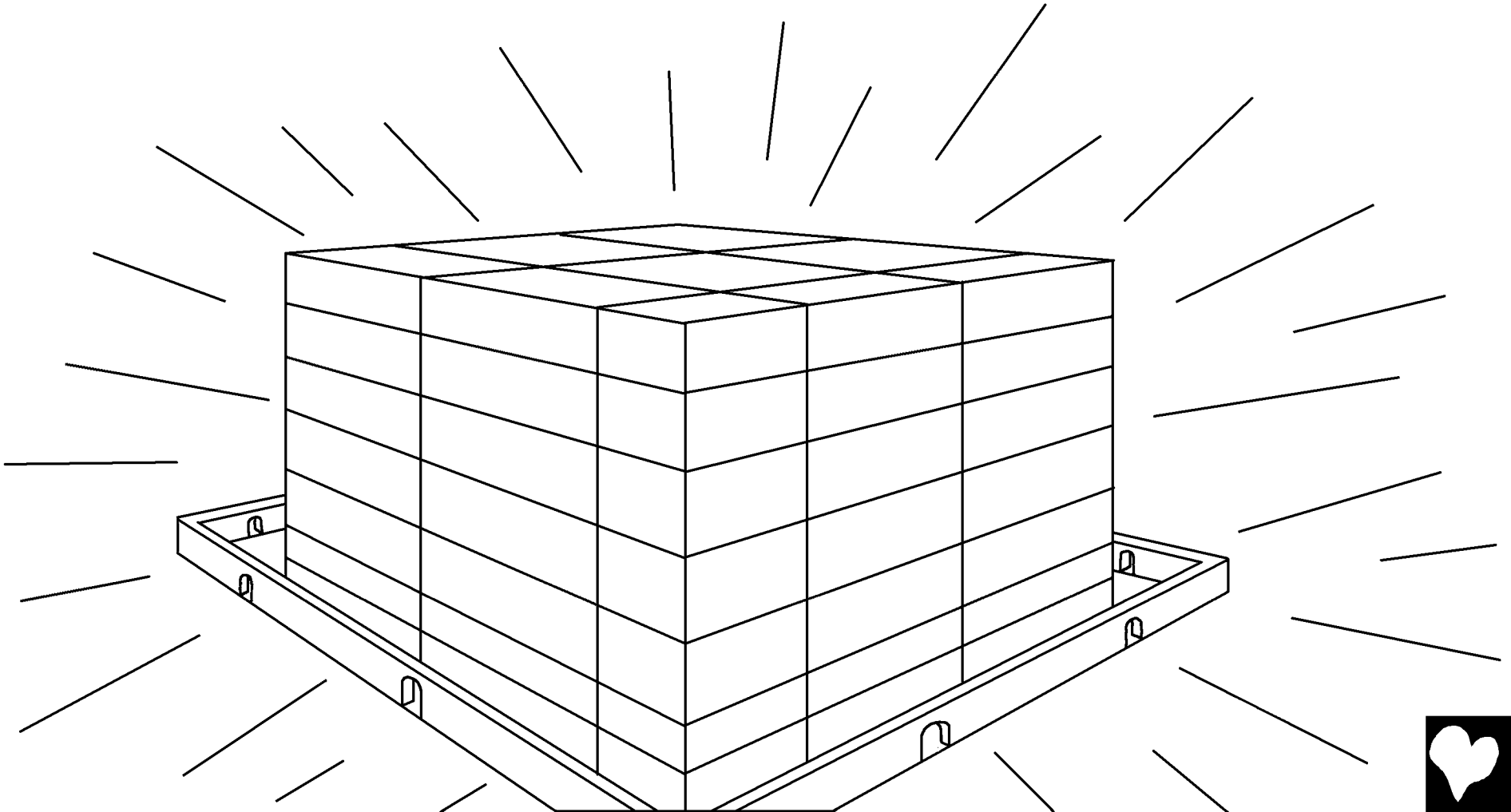

Pain ta dur na utnaa balet ma in ruk unaanga uni, ma pa te baa i laana paam a kum utnaa na wawirwir ma pa te kaai baa i laana warwaruga. Diat baa di aa timu taa a iaandiat u ra buk na lalaaun anu ra Naat na Sip diat ku diat a ruk.



“Ma in upa wa a lur na mataandiat raap.
Pain ta minaat balet ma, pa ta tapunuk,
pa ta tinaangi ma pa ta ngunungut ma,
maa a kum utnaa taanga namuga
diat aa panaai.”



A kum aakaina utnaa baa a kaankaan anun God i ki uni pa din babo ta diat balet ma. A kiki na king anun God ma anu ra Naat na Sip in ki u ra taamaan maa, ma a kum tultul anun God diat a lotu karomi.

Diat a babo a mataana, ma din timu taa a iaana u ra kum maarindiat.



Iaau babo a kum minaat raap, a kum ngaalangaala ma ra kum kinkinalik, baa diat tur namuga taa ra kiki na king, ma di palaa a kum buk. Di palaa balet raa buk, ia a buk na lalaaun. Ma di naagagon a kum minaat welaar ma ra nundiat kum pinapaam baa di aa timu koto taai u ra kum buk. Ma diat baa pa di timu a kum iaandiat u ra buk na lalaaun di ong pari wa diat u ra ngaala na tung na nguan.

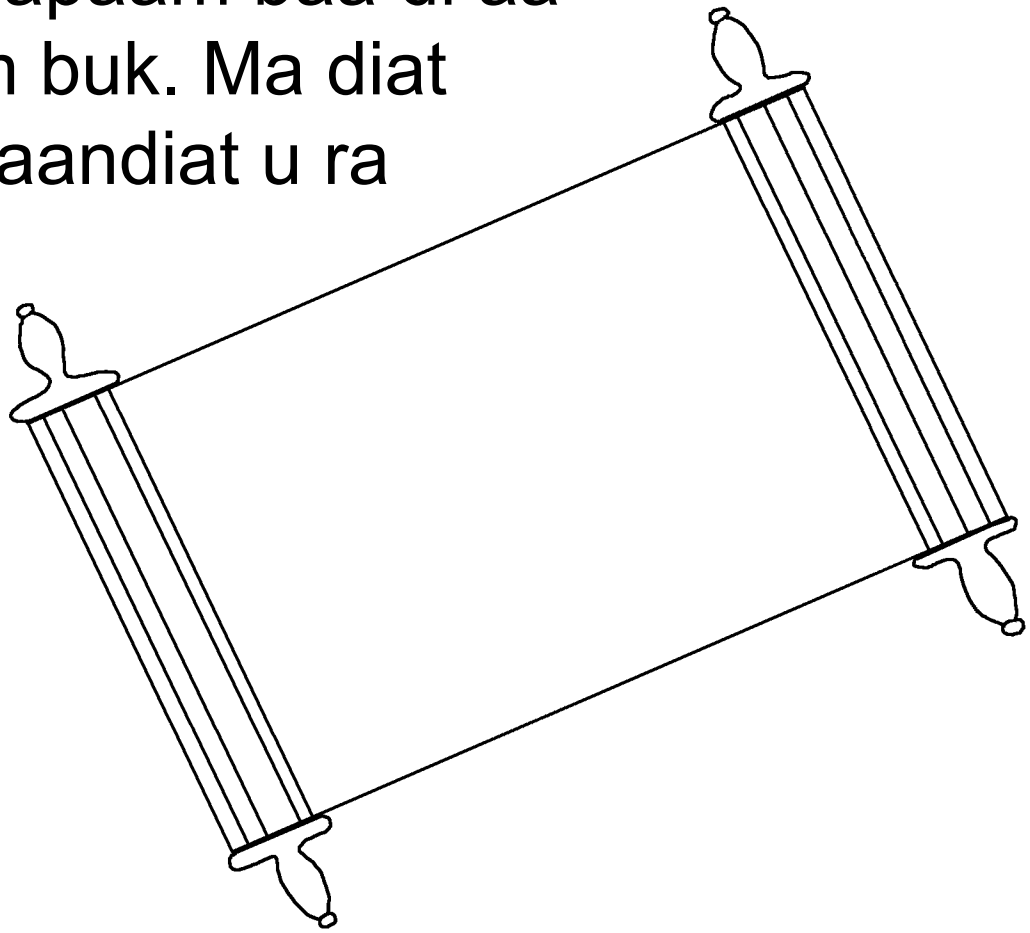

A Takado na Nion ma ra matakina tinaulaa, a tabuan, diaar piri naa, “Waan urin!” Ma baa te in walangoroi, ia kaai in piri naa, “Waan urin!” Ia baa i maruk, i koina baa in waan urin, ma ia baa i nemi, ia kaai in inim ko ra palaa na lalaaun baa pa di kuli.



God i maari a rakrakaan buaal, ma i taar wa Natuna raa ot ku, kupi diat raap baa diat nurnur uni, diat a lalaaun takum, ma pain diat a wirua.

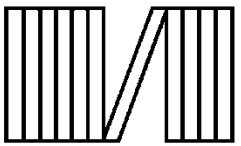

Rom 3:23 A taara raap diat aa paam taa aakaina mangamangaan, ma diat aa ki welwelik ko ra minamaar anun God.

Rom 6:23 Io, a wedok i ra mangamangaan aakaina a minaat. Iaku a wetabaar anun God ia a lalaaun takum baa daat ki un Kaarisito Iesu anundaat Tadaaru.

Ebraaio 9:27 A taara raap diat a maat raa pakaan ku, ma namur diat a tur u ra naagagon anun God.

Epeso 2:8,9 God i maari muaat ma i walaaun pa muaat baa muaat nurnur. Wakir muaat ut muaat kabina uni, a wetabaar ku anun God karom muaat. Wakir i walaaun pa muaat kabina u ra kum kokoina pinapaam muaat paami, kaduk te in wangaala pa ia ut uni.

Rom 10:9,10 Lenbi, baa u wapuaanai ma ra num pirpir naa Iesu ia a Tadaaru, ma u nurnur u ra in balaam naa God ia watur paai balet ko ra minaat, io God in walaaun ui. Maa baa u nurnur u ra in balaam, God i waatung ui naa u takado namataana. Ma baa u wapuaanai ma ra num pirpir naa Iesu ia a Tadaaru, God in walaaun ui.

Ioaanes 3:16,17 “God i maari a rakrakaan buaal, ma i taar wa Natuna raa ot ku, kupi diat raap baa diat nurnur uni, diat a lalaaun takum, ma pain diat a wirua. God pa i tula wa Natuna urin u ra rakrakaan buaal kupi in taar a naagagon na binabaalu karom a rakrakaan buaal. I tula wai ku kupi in walaaun a rakrakaan buaal.”

1 Ioaanes 5:11-13 Anuna wewapua kaapa i lenbi: God ia taar taa a lalaaun takum taan daat, ma a lalaaun maa i ki un Natuna. Ia baa Natun God i lalaaun uni, ia paam akoto a lalaaun. Ma ia baa Natun God pa i lalaaun uni, pa i paam akoto a lalaaun. A kum utnaa mi iaau timui karom muaat, kupi muaat baa muaat nurnur u ra iaan Natun God, muaat a nunurai naa muaat aa paam akoto a lalaaun takum.

Ioaanes 14; 2 Korinto 5; Binabo 4, 21, 22

Storyline by: Edward D. Hughes

Illustrated by: Lazarus
and Alastair Paterson

Adapted by: Sarah S.

Ramoaaina NT (rai) © 2006, Wycliffe Bible Translators, Inc.
All rights reserved.

https://live.bible.is/bible/RAITBL/MAT/1

©2026 Bible for Children, Inc.
www.M1914.org www.bibleforchildren.org