www.BibleForChildren.org

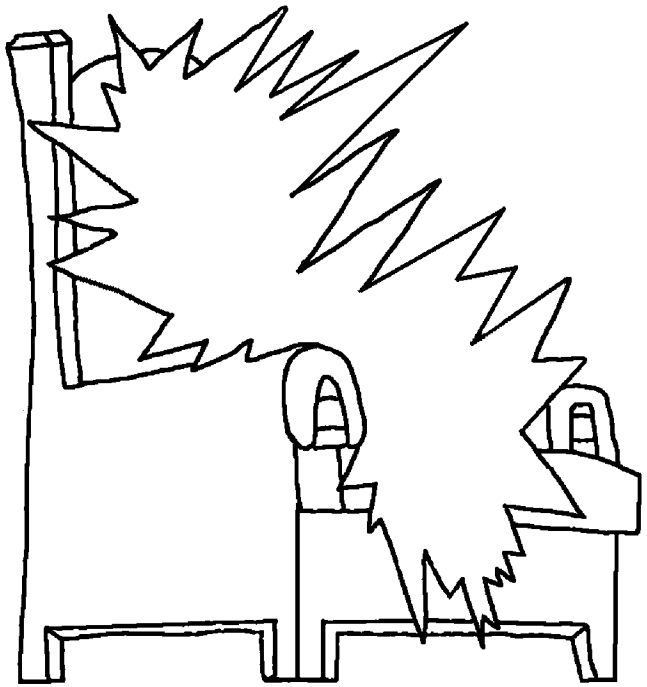

YOHANE 14

Ninfɛ di Yesu latɔkɔ basaateketetɛ nɔɔ alɛ, “Bitanta otu lapɛ ye. Bifũ Yaa binu, biefũ ami kafɔɔ binu. Mbuokɔ kpinwu nkpe di Teemi leyo, kosifi ninaalolaa lɛba ntɛ ye. Nse kuote nkpo yi, namatɔkɔ ye. Nse ntɔlalolaa lɛba lɛtɛ ye leloo yi, makple nwa makpaa ye nsifiko ɔkyɛ nii, alɛ nfũ nkpe nii yi, aye kafɔɔ bibasiɛ ninfa.”

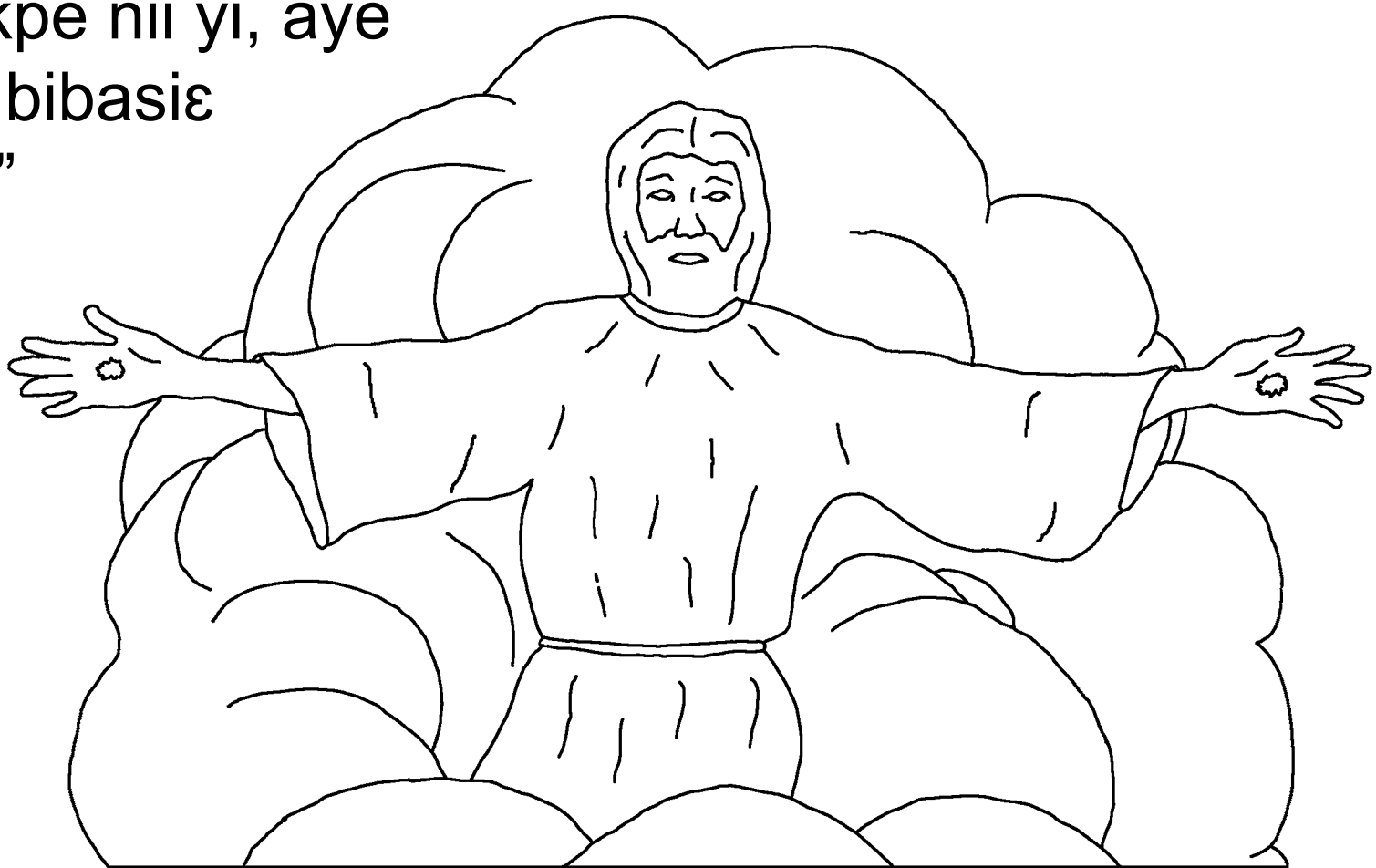

Ami, Yohane wɔ ninle ni siɛwo lee ku obilee, diobuo ni bamuu loo ta Yesu wɔ ninle wo ni Ɔka oso. Kafɔɔ ookpee awo ba nimba ni sɛka kalekɔ

nɔɔ nwu nkpo osie munwɛ otu okpee kaayi ka mmle kamɛ.

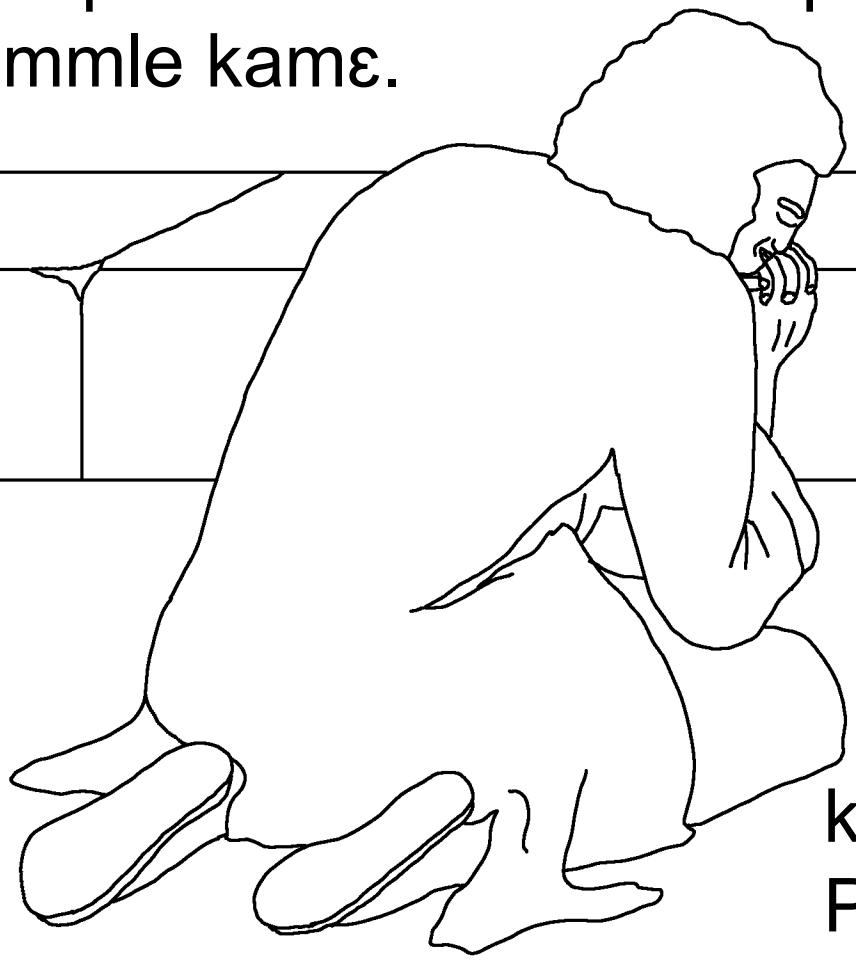

Batii lɛkpaa mi bɛɛlaatɛ di kasɔ ka di ntu lɛmana keekyi ni bɔɔlɛɛ ni Patmo suoto.

Diekye layie Yaa ɔlaa biene nwu nkpo lɛkya di Yesu Kristo suoto.



Nfanwu, Yaa Ninwuna nwu labuo mi kaamɛ ni lanya lɛkakpomii ninwii di osi di otii nsi ni nɛ.

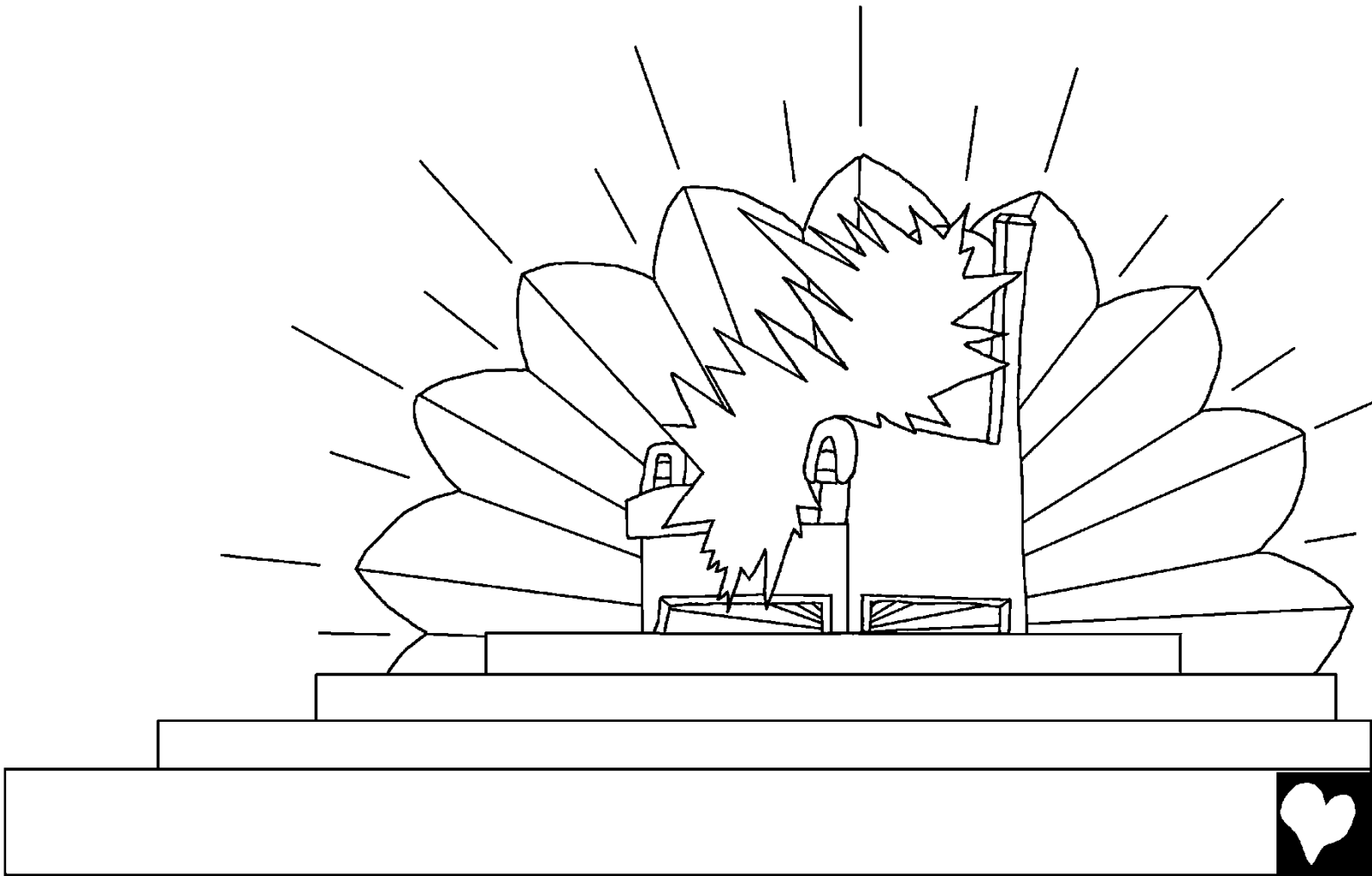

Ninfɛ lanu asaa ya amuu di Yaa lɛbla ni di osi ku kasɔ ka mmle suoto ku kasɔ kamɛ ku n-ya nisi ni leekpo kamɛ latɔɔsa onu baatoobuɛ alɛ,
“Otii wɔ ninsi ni lɛɛkakpomii nwu nkpo suoto ku Lefosobi nwu, baata katansa ku dibu ku leklekle ku ɔnyɛɛ, dinaa ni kaloo!”

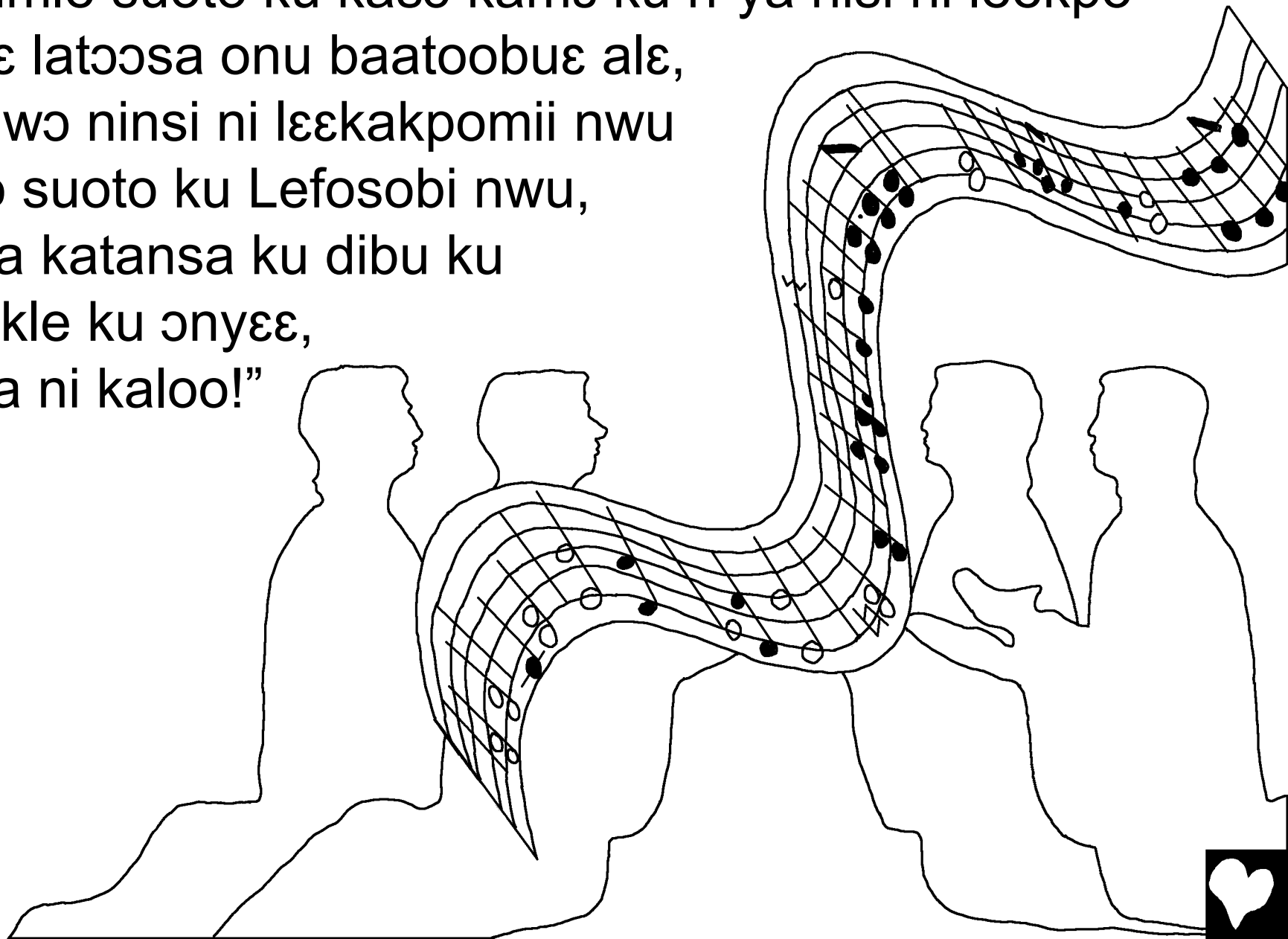

Ninfɛ lanya okpoo klekle nwu ninle Yerusalem fɔle nwu nkpo kosoo kunkye osi di Yaa nfũ kunwa kasɔ nɛ. Beelolaa nwu osie kanya fɛ mmle okle manlolaa ni ɔkafɔɔsɔfɔ manta ni ɔkafɔɔsa. Ninfɛ lanu sɛlɔ kplɛ sinwii ladie siakye lɛkakpomii nwu nkpo katũ, siabuɛ alɛ, “Nyu lo! Nunua Yaa kafa nfɛ nsi baatii kamɛ! Abasiɛ ko ma, manle nwɔ batii. Yaa omu nfɛ masiɛko ma, anle ma Yaa.”

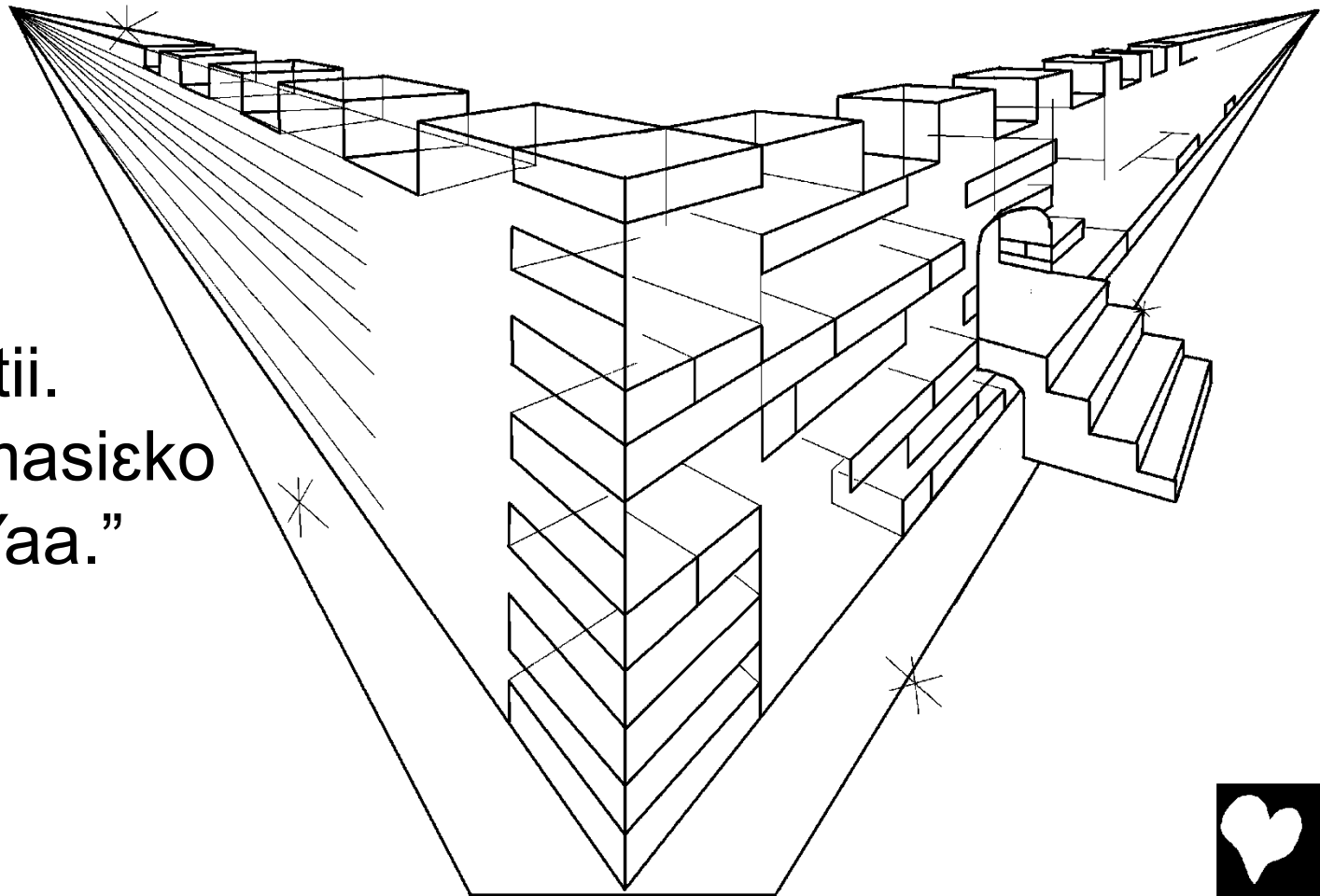

Nni nkpo sɛmaa, Yaa tɔkyɛntɛ nwu nkpo latuo mi okle wɔ ninta ni nkpa. Okle nwu nkpo lɛkpa klenklen fɛ awɛwɛ kuodie kunkye Yaa ku Lefosobi nwu nkpo lɛkakpomii katũ, kuobiɛ kunfe di okpoo nwu nkpo osuku kplɛ nwu ntɛɛ.

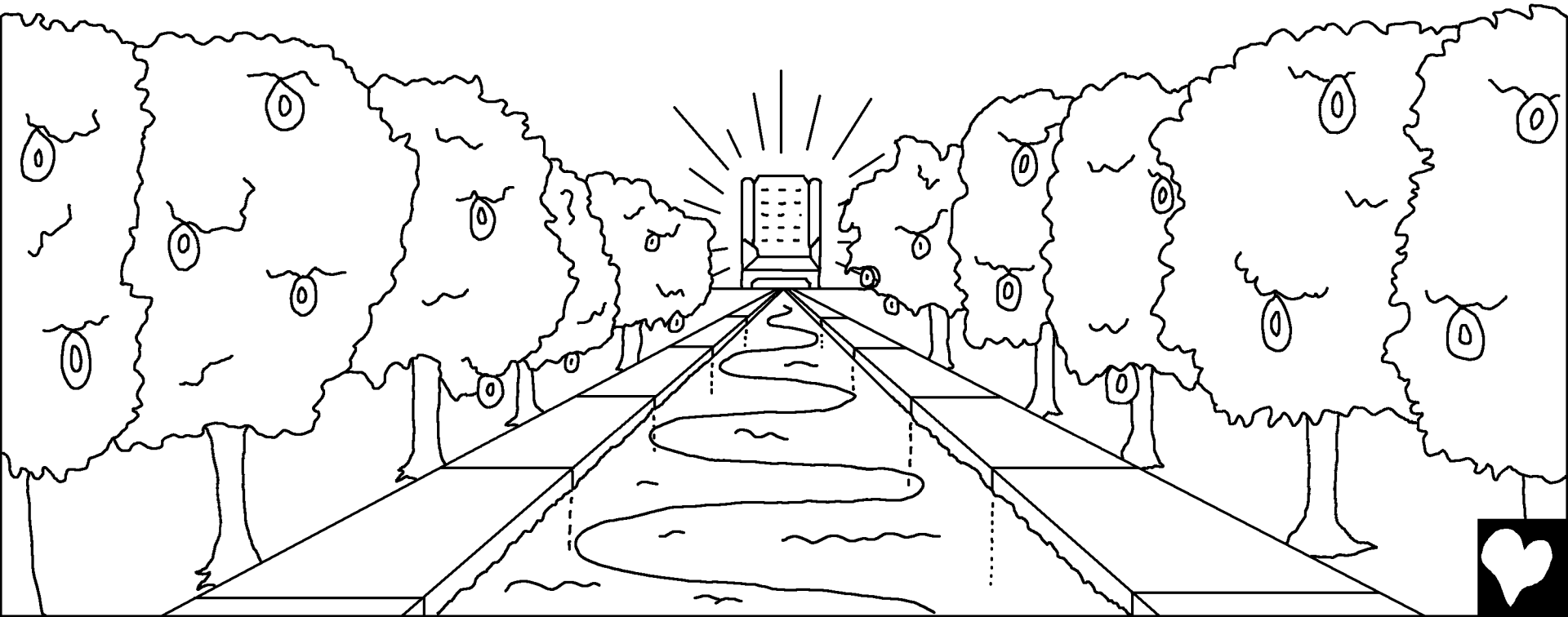

Kufĩ ee kɔwɛntɛ diefĩ di okpoo nwu nkpo alɛ kuakpa, diekye Yaa lɛkpa ninle nwu lɛkpa, Lefosobi nwu nkpo kafɔɔ ninle nwu kandiɛ.

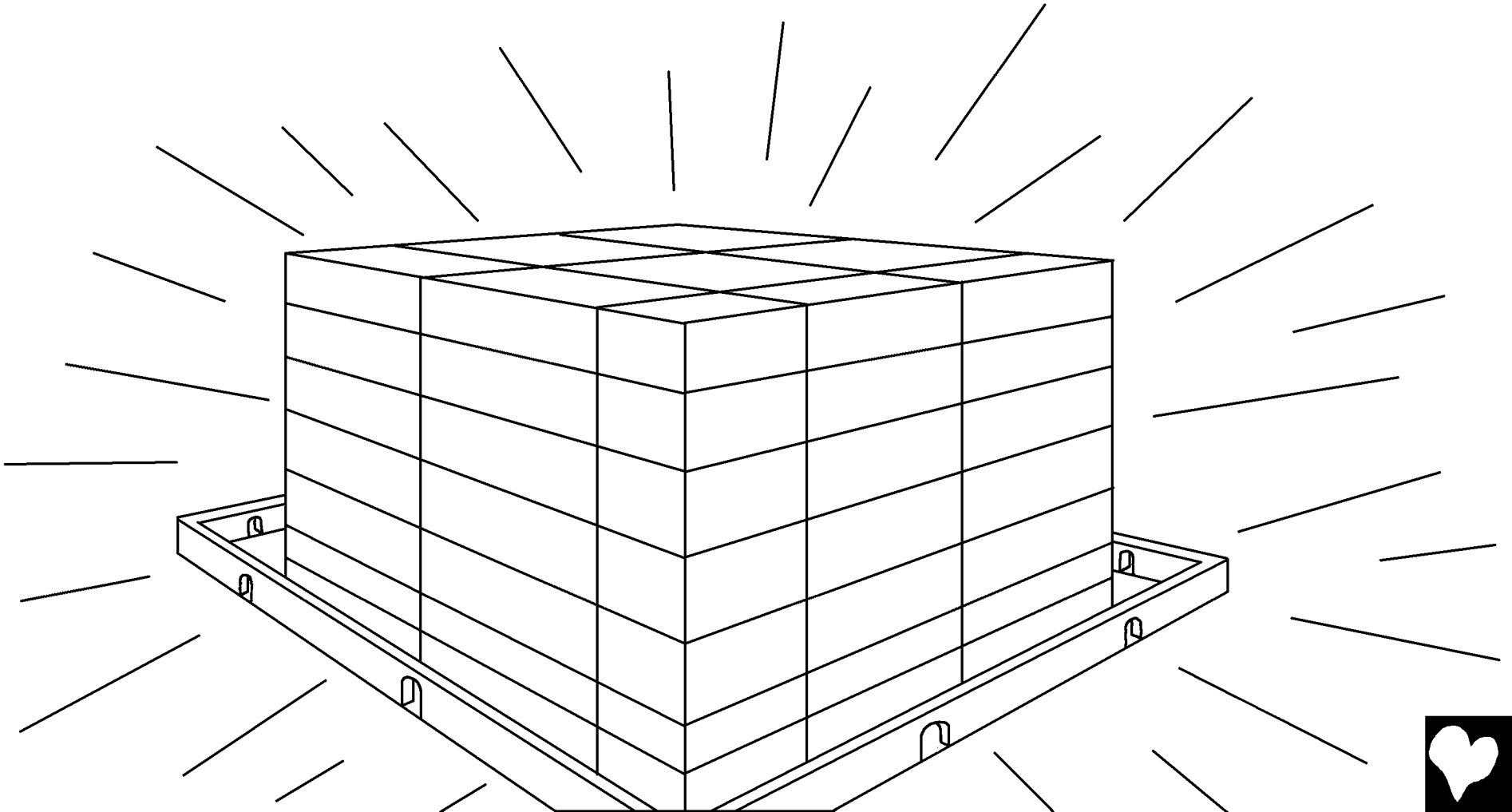

Kafɔɔ diidii, lɛsaa kpɔnɔnfɔɔ kuninwii dilababuo okpoo nwu kamɛ ee batii ba nimbla ni anunsɔsaa ee balaatɛ dilababuo nfa. Diediki batii ba lete ayooto bɛɛkpana ni di Lefosobi nwu nkpo nkpa kukũ kamɛ, nimabuo okpoo nwu.

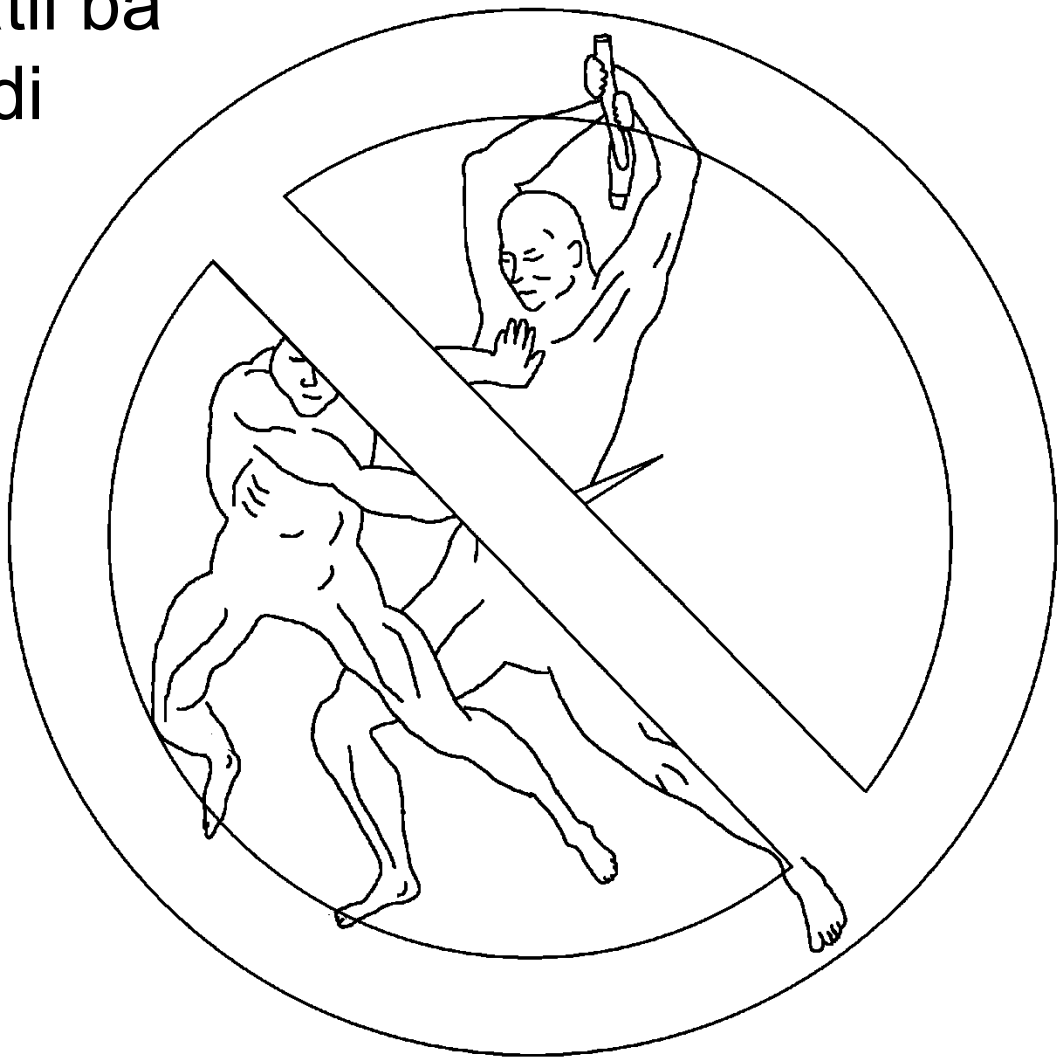

“Aba sunsũ ma nnumɛɛ biala di anu. Kukpi dilabasinwɛ. Nkpo okle kafɔɔ di sɛnyaami ee kaku owi ee dibuo dilabasinwɛ nɛ, diekye asaa kofole amuu ntoofe.”



Lɛsaa lele di Yaa lɛkpaani ntika di suoto dilababuo okpoo nwu. Diekye Yaa lɛkakpomii ku Lefosobi nwu nkpo mawɛ ninfa, bakpɛmblatɛ nɔɔ mase ntũ kaasɔ mansumu nwɔ. Babanyɔɔ anu ku anu, leyooto nɔɔ kafɔɔ mantika ma nintũ.



Ni lanya bakpi bamuu n-yɛ di lɛkakpomii nwu nkpo kotũ, babisɔntii ku banɔɔfotii. Ni baatikiti akũ nɛ. Ni baakple baatikiti kukũ bamba ninle ni nkpa kukũ nɛ. Ni baakanko bakpi nwu nkpo di ɔsaabla lɛma kanya, fɛ mmle okle bɛɛkpana beekpee ni di akũ nwu nkpo kamɛ nɛ. Batii ba ayooto manankpana ni di nkpa kukũ nwu kamɛ, baafuki ma baakpee di ɔtɔ lɛpanta nwu kamɛ.

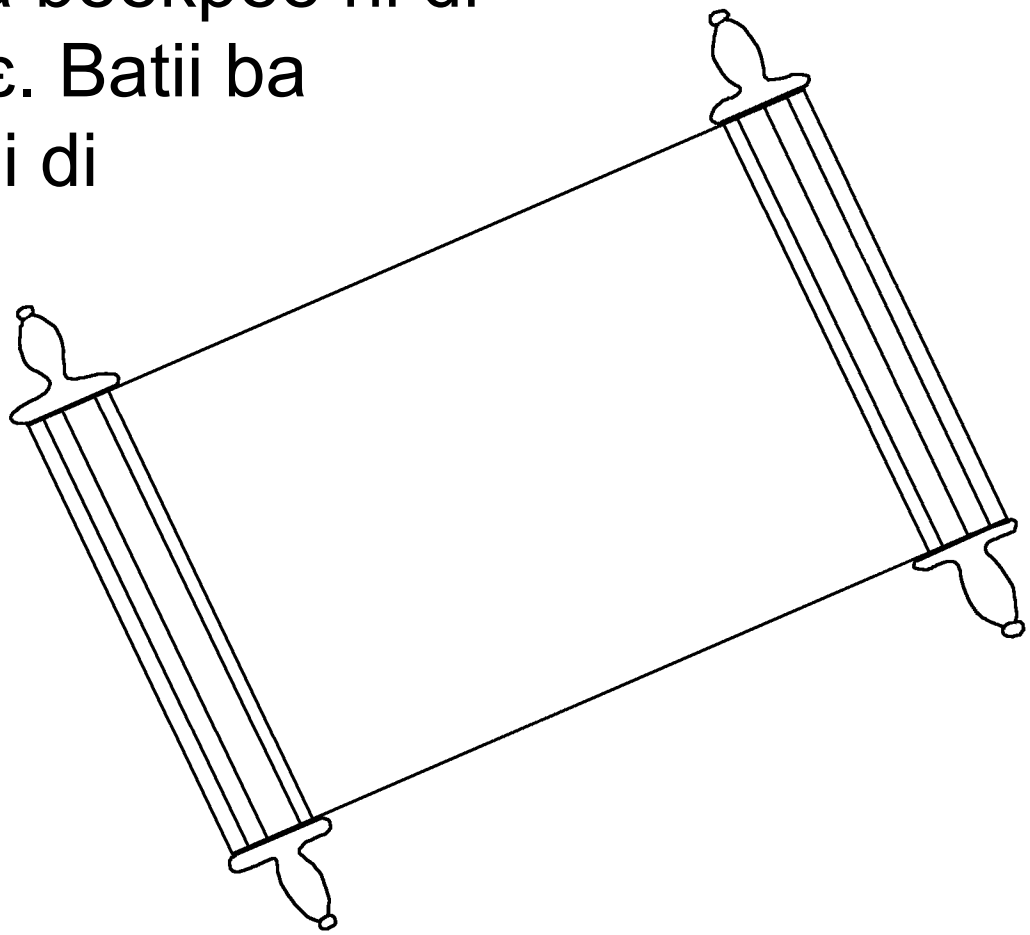

Yaa Ninwuna nwu nkpo ku Ɔkafɔɔsɔfɔ nwu labuɛ alɛ, “Wa!” Otii lele kafɔɔ nienu ɔlaa wɔ mmle, dikpe nii ambuɛ alɛ, “Wa!” Otii lele di otukɔnsɔ nkle, eetuna awa. Abafũ nkpa ntu anyi, anamata ni lɛsalɛsaa.

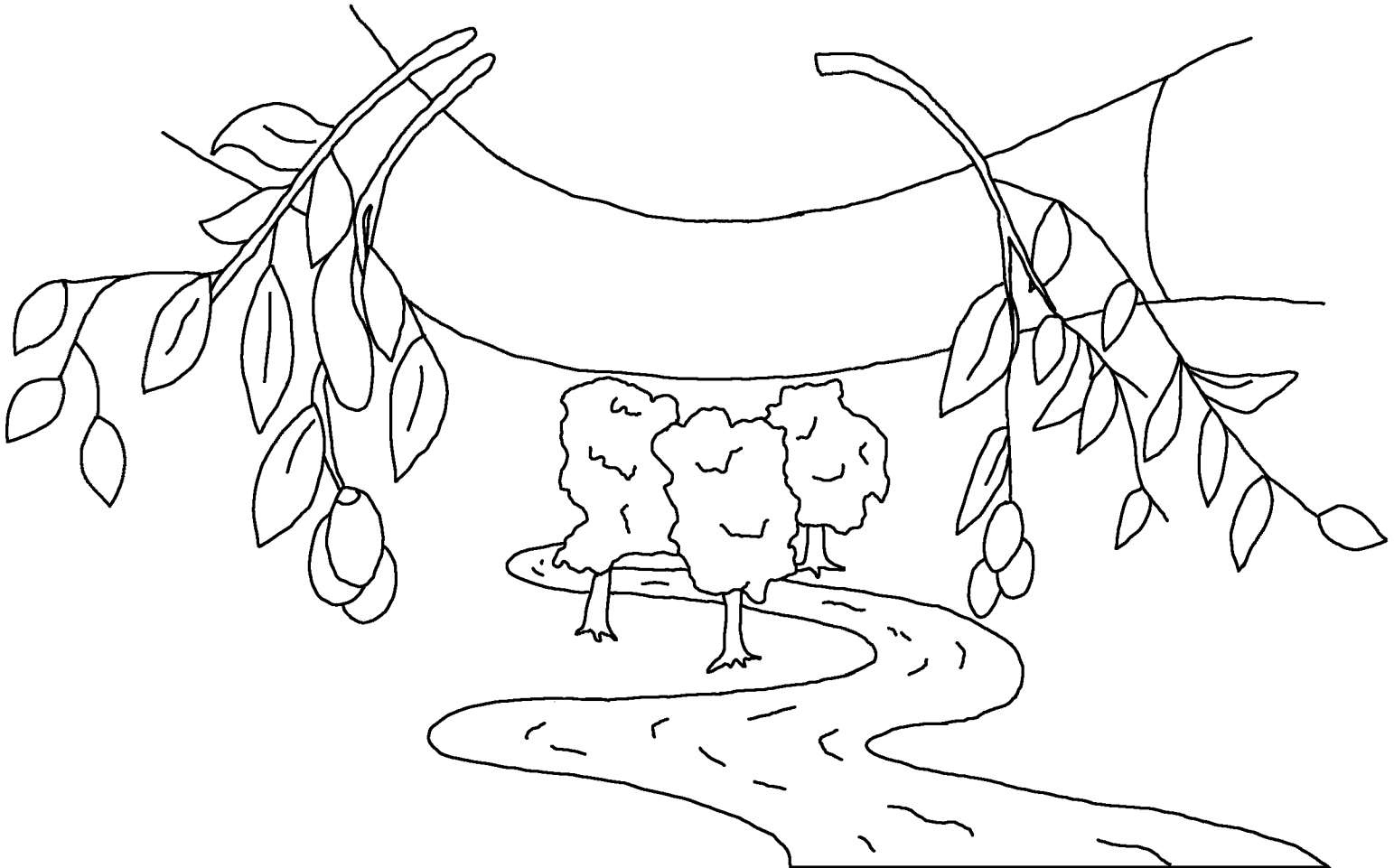

Diekye Yaa ntɛ ambɔmbɔ kayi ka mmle osie kanya, ni ɛɛyɔ Obi nɔɔ onwii nwu ɛɛta alɛ, otii lele niefũ nwɔ eenu, alaawɔɔ. Kafɔɔ, aawɛ nkpa be ninnaa ni kaloo.

60

ROMA BATII 3:23 Kaasɔ ninle alɛ batii bamuu ntɔɔbla okpile, beekpukuti di Yaa leklekle nfũ.

ROMA BATII 6:23 Diekye okpile letota ninle kukpi, kafɔɔ Yaa sibualɛ se eele wo ni ninle nkpa be ninnaa ni kaloo, diefe ni di Saate loo Kristo Yesu onwii ɔbla kamɛ oso.

HEBRI BATII 9:27 Yaa lɛbla ɛɛta otii alɛ, akpi ninwii pɛ, nni kamaa, abakanko nwɔ.

EFESO BATII 2:8,9 Diekye Yaa niele wo sibualɛ eediki wo diefe ni di ofũ onu kamɛ. Diele awo bamu niɛbla lɛsalɛsaa, kafɔɔ Yaa lɛkyɛsaa dile. Nkpo okle kafɔɔ ninanle awo bamu ɔkpɛ ɔbla kuonwii nɛ. Nkpo oso, kuonwii dilaafuo ɔkanta.

ROMA BATII 10:9,10 Nse fɛɛbɛ kanya feebuɛ falɛ Yesu ninle Saate, feefũ feenu di otu lɛfɔ kamɛ falɛ Yaa latakatɛsa nwɔ aakyeko bakpi kamɛ, Yaa mata fɔ nkpa. Diekye otu kamɛ di otii nfũ aanu fiɛ manta otii nwu lɛbɛ di Yaa anu. Kanya kafɔɔ di otii n-yɔ andiki ambuɛ fiɛ di Yaa ntɔɔ nkpa.

YOHANE 3:16,17 “Diekye Yaa ntɛ ambɔmbɔ kayi ka mmle osie kanya, ni ɛɛyɔ Obi nɔɔ onwii nwu ɛɛta alɛ, otii lele niefũ nwɔ eenu, alaawɔɔ. Kafɔɔ, aawɛ nkpa be ninnaa ni kaloo. Diekye Yaa diekyesee Obi nɔɔ nwu alɛ abakanko batii kaayi ka mmle alo ma lɛpɔɔ. Kafɔɔ alɛ diefe ni di Obi nɔɔ nwu suoto, batii kawɛ didiki.”

1 YOHANE 5:11-13 Ɔlaa nwu nkpo kamaa oyila ninle alɛ Yaa lɛyɔ nkpa be ninnaa ni kaloo ɛɛta wo, nkpa nwu nkpo ɛɛta wo ni nsi di Obi nɔɔ kamɛ. Otii wɔ niefũ ni Yaa Obi nwu nkpo yi, akpe nkpa be mmle. Otii wɔ kafɔɔ ninafũ ni Obi nwu nkpo yi, anaa nkpa be mmle nwu nkpo. Kɔkpana kukũ ko mmle nkyesee aye ba niefũ Yaa Obi nwu nkpo bienu nii, nlɛ bitofo bilɛ bikpe nkpa be ninnaa ni kaloo.

YOHANE 14; 2 KORINTO BATII 5; ODIKI OTUO 4, 21, 22

Storyline by: Edward D. Hughes

Illustrated by: Lazarus
and Alastair Paterson

Adapted by: Sarah S.

Selee NT (snw) © 2008, Wycliffe Bible Translators, Inc. All rights reserved.

https://live.bible.is/bible/SNWWBT/MAT/1

©2026 Bible for Children, Inc.
www.M1914.org www.bibleforchildren.org