www.BibleForChildren.org

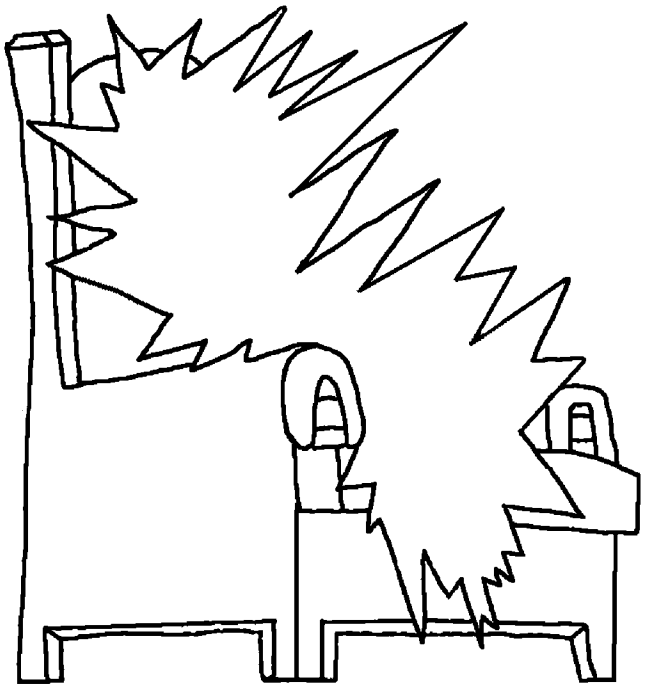

Yohanus 14

Ye pasa pitinu satiŋgit ta tuku tane wamdus fulil ndakap. Tane Kuate tuku saŋgri tomba tiŋga ye tuku saŋgri mata tomba tiŋgap. Mam tuku tumbraŋŋge wande gudommba minig.

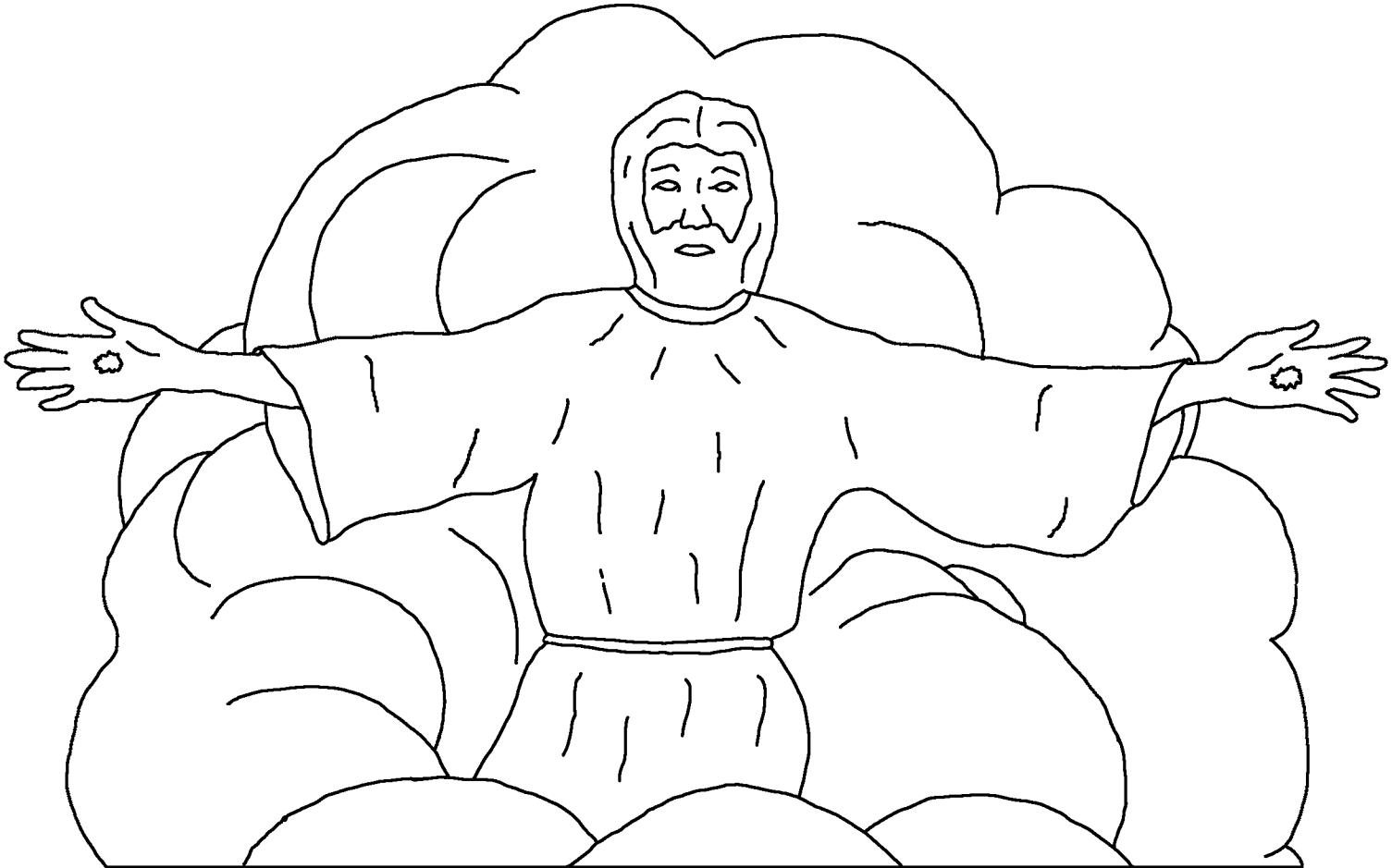

Taŋamba mine ndakuwaig ta ye satiŋge nda. Ye kumba ka tane tuku ma wakeiwamŋgit. Tane tuku ma wakeiwi sulumba luka pro tane kili le tane ye ndoŋ minmba minamŋgaig.

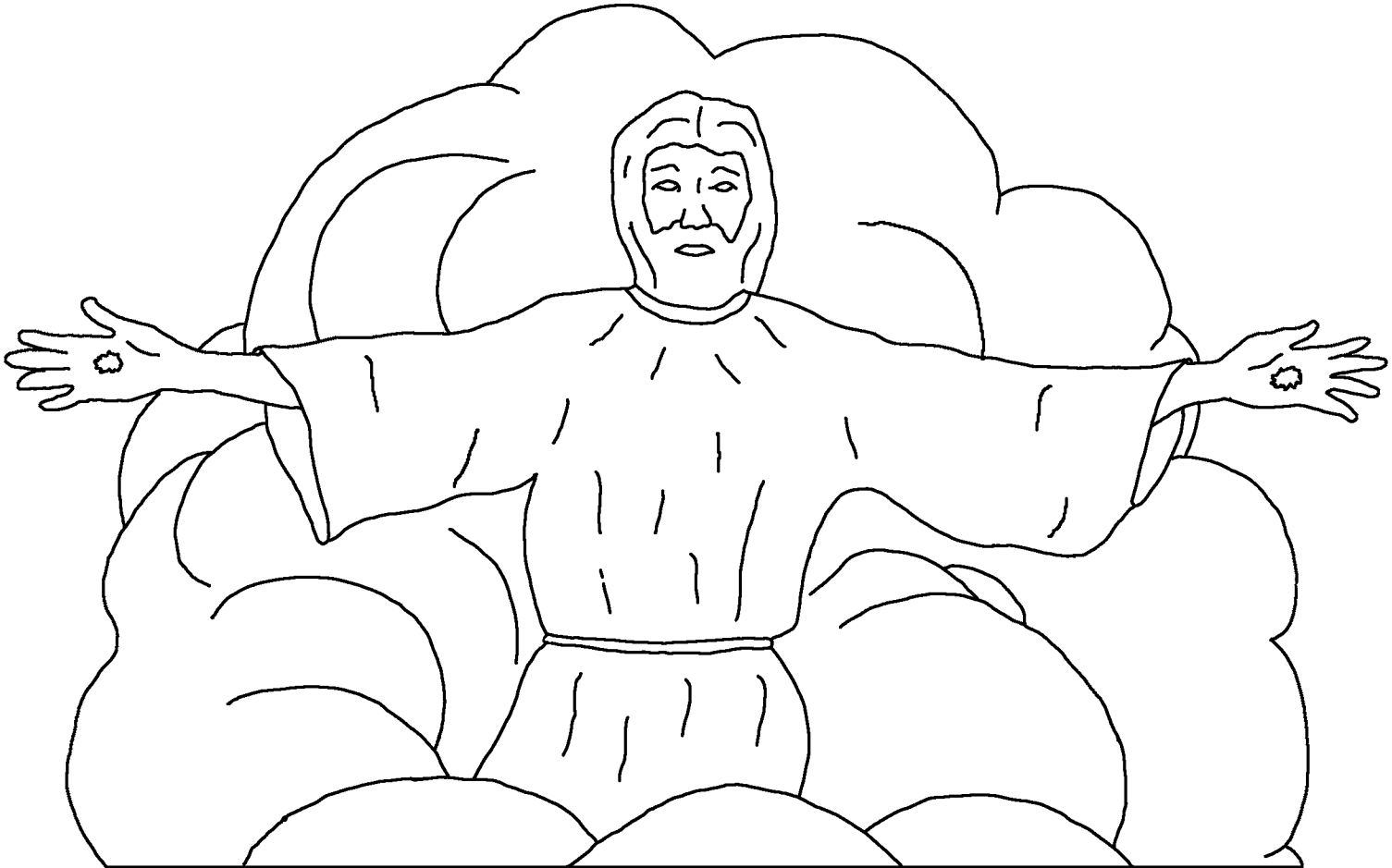

Ye Yohanus tane tuku tira taŋgo. Sine ŋakmba Yesus tuku kuasmbi mineg tukunu sine piti ndui ta ndo kuramba ŋakmba nu tuku gageu

mayok ka saŋgri tiŋga dirnaŋgeg. Ye Kuate tuku pasa tugusek Yesus

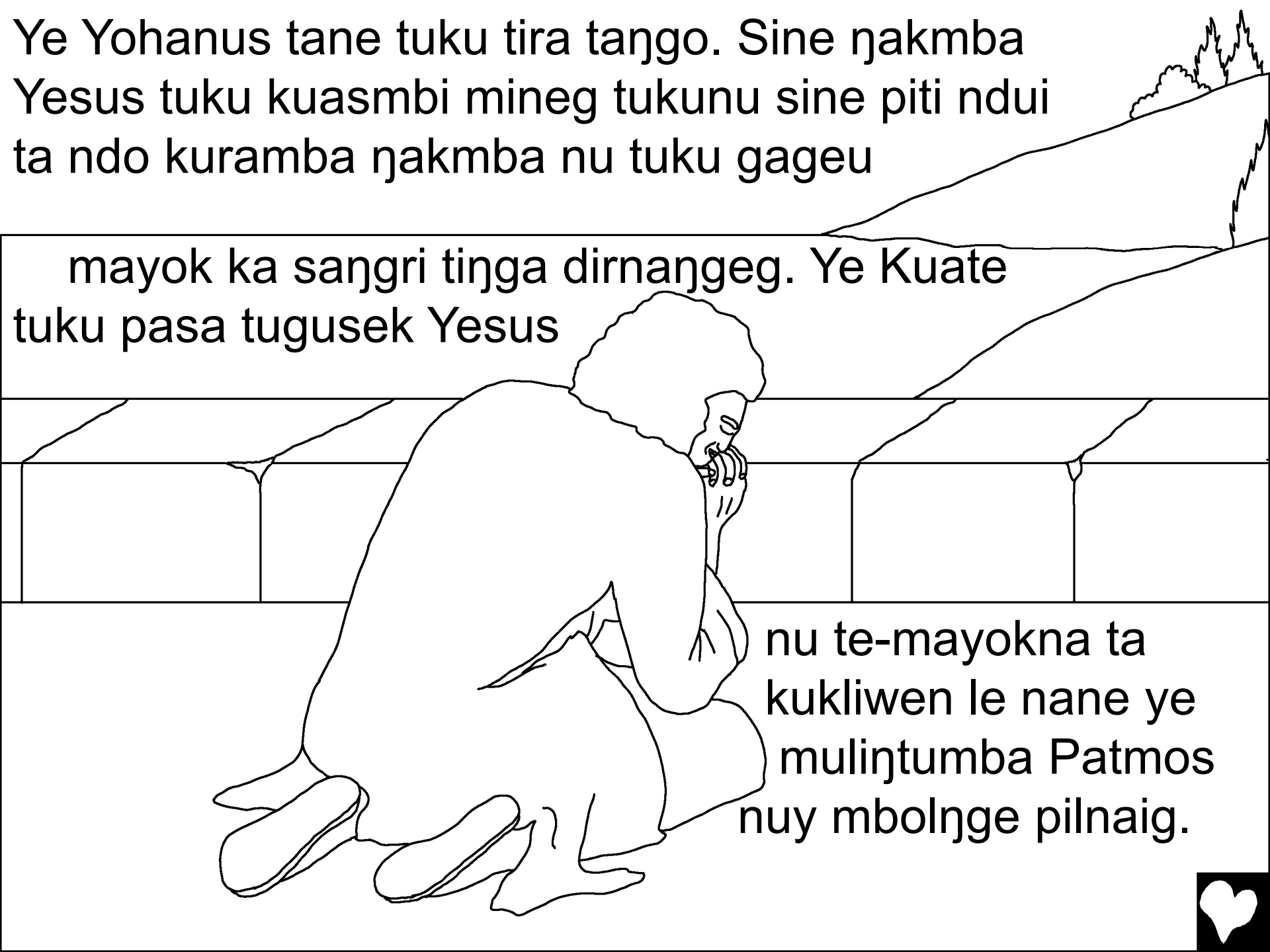

nu te-mayokna ta kukliwen le nane ye muliŋtumba Patmos nuy mbolŋge pilnaig.

Taŋakina le Tukul Guwa ye mbol kumuŋgina le ye samba mbolŋge minyo mbili maditaknu minna le ande nyu suŋgo ŋak minyo mbili ta mbolŋge minyokina le kaŋgeren.

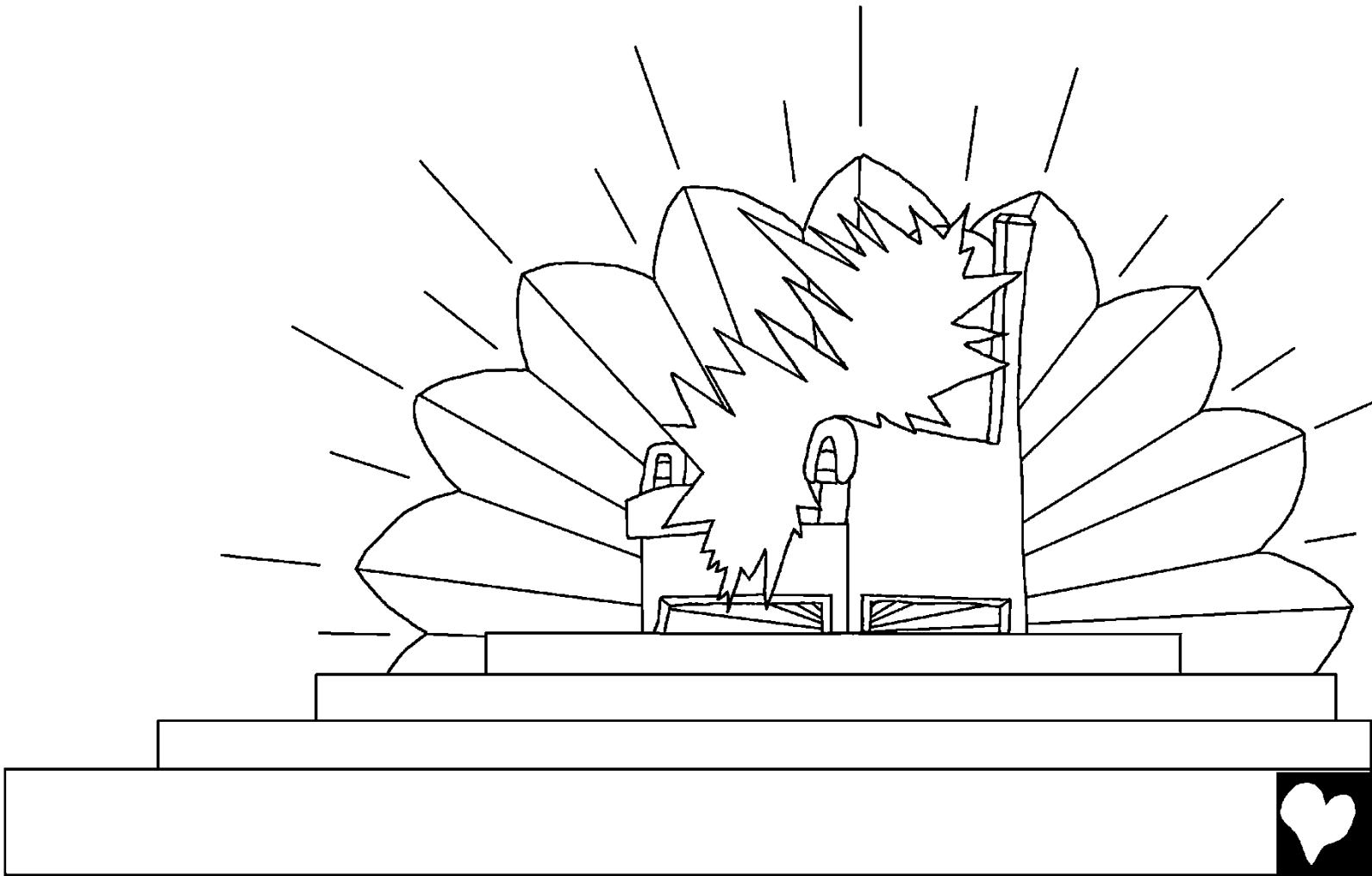

Kile samba mbolŋge kilke mbolŋge kumnemŋge yu sinamŋge agaŋ ŋakmba teŋenmba sakinaig. Taŋgo minyo mbili maditaknu mbolŋge minit nu Sipsip Fat ndoŋ nale saŋgri ŋakmba ŋak minmba minwaik. Sine nale tuku nyu te-duŋga minmba minbe ŋginaig.

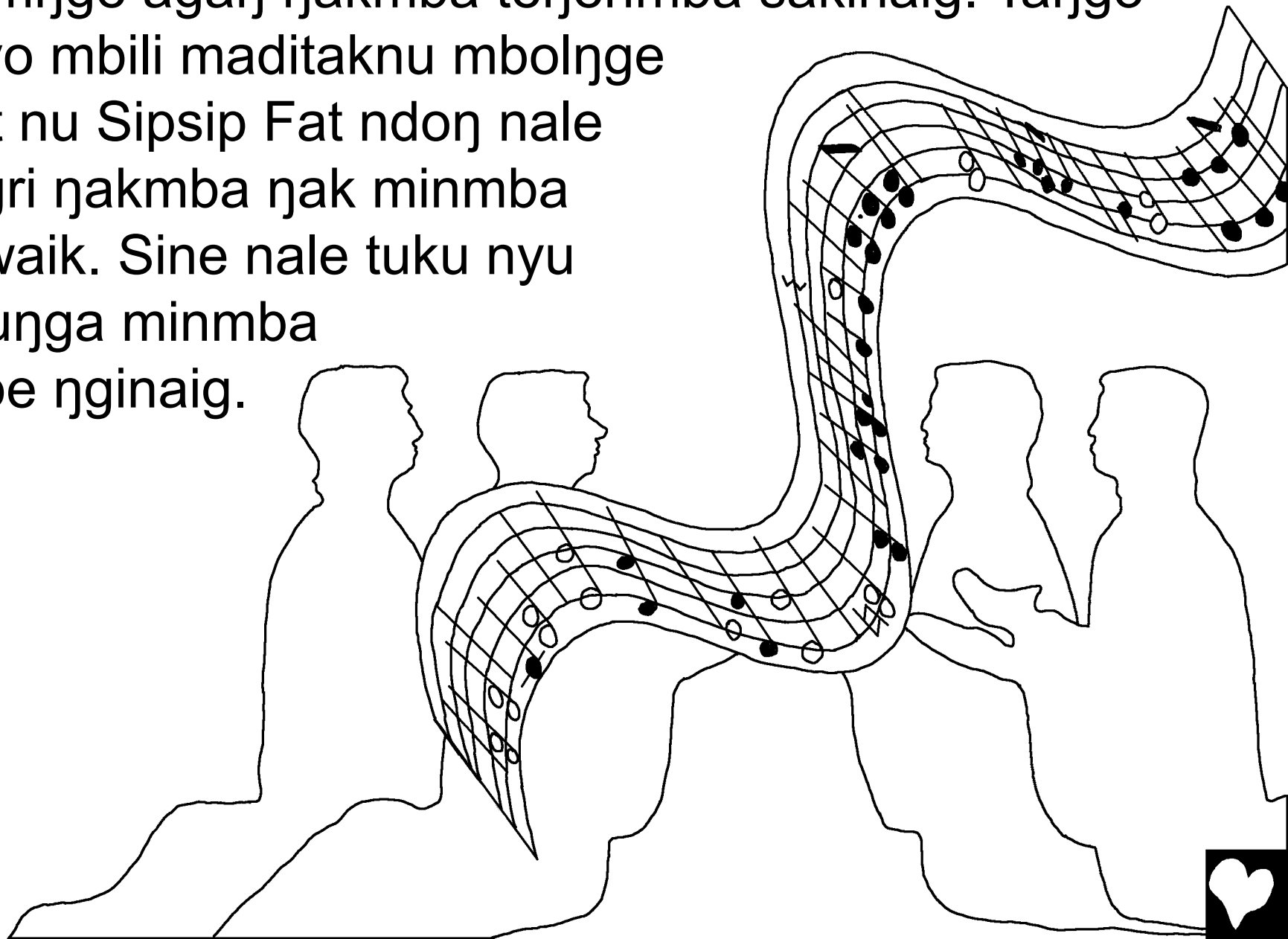

Ye Kuate tuku tumbraŋ Yerusalem kitek Kuate tugumŋge samba mbolŋge ndekina le kaŋgeren. Tumbraŋ ta pino nu taŋgo tam tuku mindepiye mayete taŋaŋ ŋak ndekina le kaŋgeren. Kile minyo mbili maditaknu tugumŋge pasa suŋgo ande mayok ka sakina: Tane isap. Kile Kuate minit tuku tumbraŋ ta taŋgo ŋgamukŋge minamŋgat. Taŋawa le Kuate nu nane ndoŋ minwa le nane nu tuku gageu minamŋgaig.

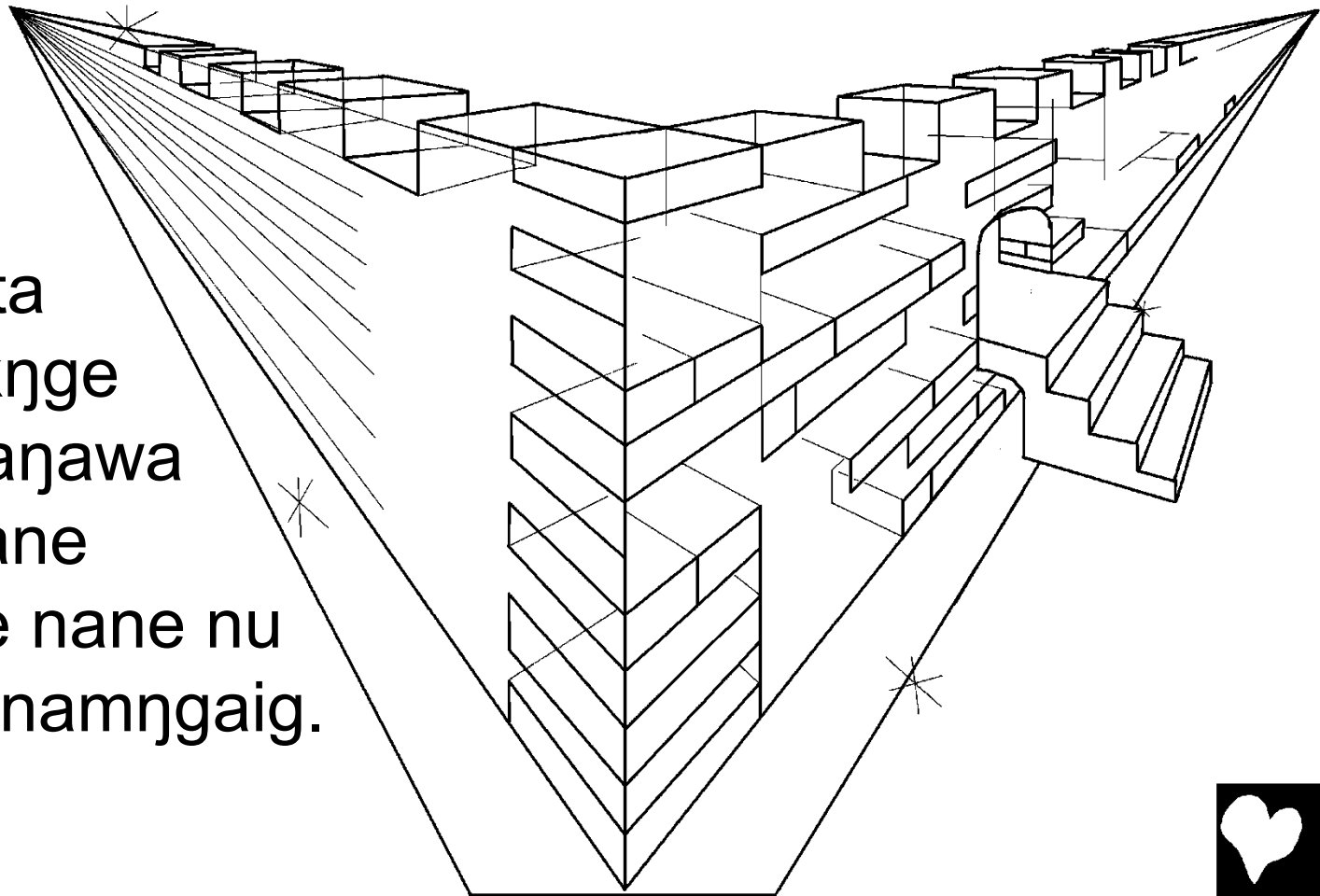

Kile eŋel nu maŋ kule nyumba minmba minam tuku ta ye tumyina. Kule ta glas taŋaŋ uge liŋnu ndo. Kule ta Kuate le Sipsip Fat tuku minyo mbili maditaknu kumnemŋge ndeka tumbraŋ ta tuku ndin taŋaŋ ŋgamu ŋgamu pinderka kinit.

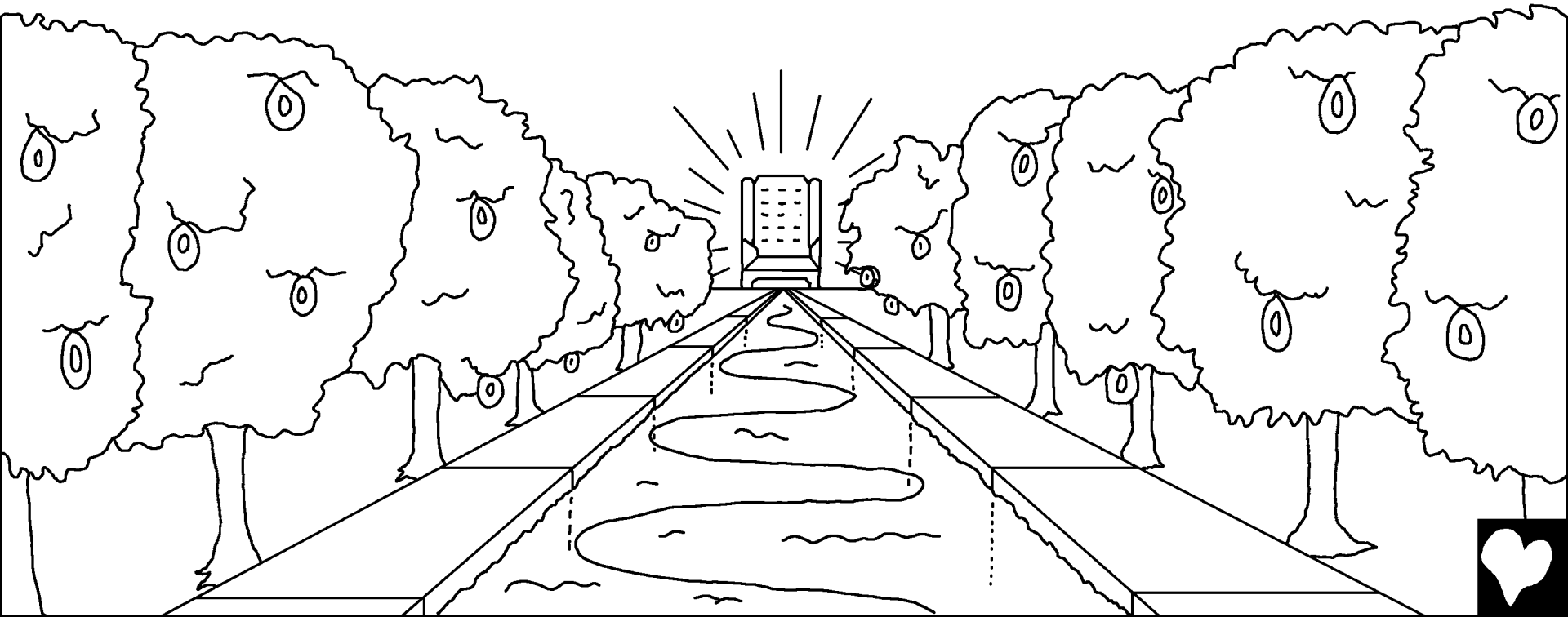

Kuate tuku kilŋa suŋgo tumbraŋ ta kilŋate le Sipsip Fat nu tumbraŋ ta tuku bulu minit. Ta tuku tumbraŋ ta ki le tambun kugatok.

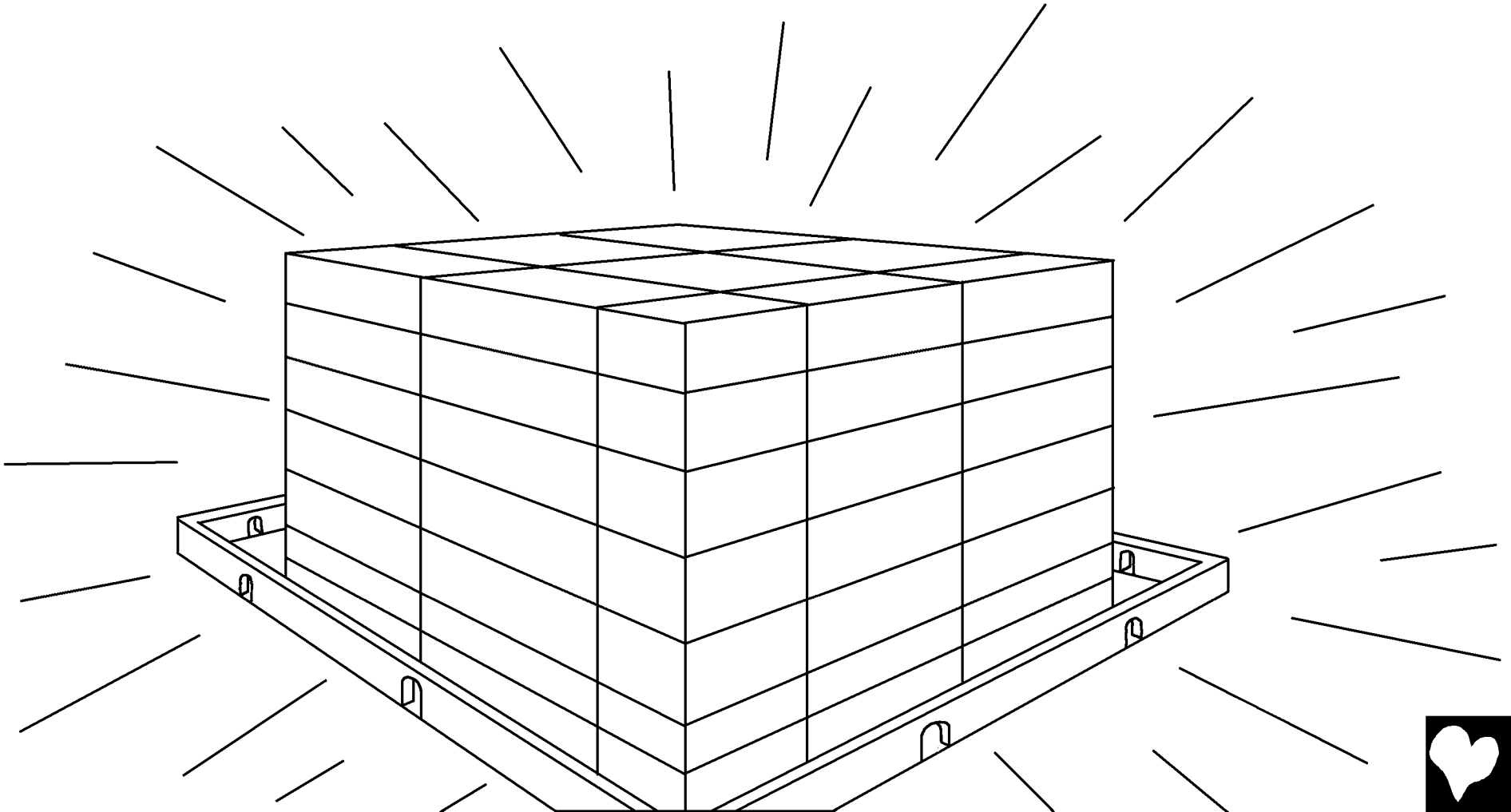

Agaŋ kutur ŋak wam ŋule parak kade mbal yabri mbal nane ndo tumbraŋ ta sinam kine nda. Mbal abo ŋak minmba minam tuku Sipsip Fat tuku waŋe mbolŋge nyu ŋak minig ta nanenŋge ndo sinam kaŋgaig.



Nu nane ndoŋ minmba nane tuku am kule ŋakmba sauke sulumba para serniŋgamŋgat. Nane maŋ kume nda. Ɗgamuŋgal piti te nda. Malmbike nda. Rar kamuse nda. Ambokok maŋau ta ŋakmba ŋgisikamŋgaig ŋga sakina.



Agaŋ ande Kuate nu kasurte ta tumbraŋ ta sinamŋge mine nda. Kuate le Sipsip Fat tumbraŋ ta kulatkuwaik le nuŋe piro mbal nu mbariŋamŋgaig. Nane Kuate kaŋgermba nuŋe nyu nane tuku tumail mbolŋge minamŋgaig.



Ye mambilmba kumanu mbal nyu ŋak nyu kugatok nane ŋakmba minyo mbili suŋgo tumailamŋge tiŋ minnaig le kaŋgerken. Nane afu yu sinamŋge kumnaig ta ŋakmba tiŋginaig. Afu kummba kumanu mbal tuku tumbraŋŋge minnaig ta mata tiŋginaig.
Nane ŋakmba tiŋginaig le Kuate nu ndek waŋe afu talke likina sulumba waŋe ande minmba minam tuku mbal tuku nyu ŋak ta turmba talkina.

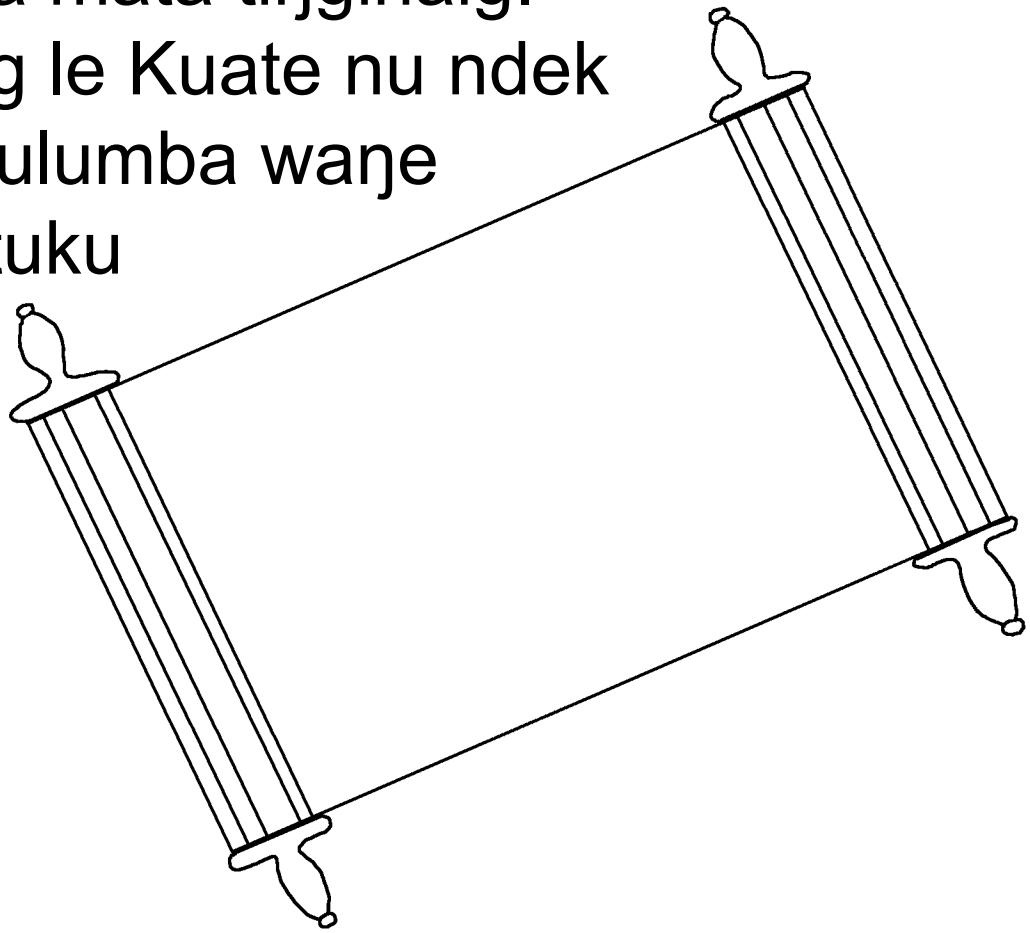

Kumanu mbal ŋakmba tiŋginaig le naŋgine wam ke likanu waŋe ta mbolŋge minnaig le kaŋgerka kumumbi pileniŋgina. Nane afu minmba minam tuku nyu waŋe mbolŋge mine ndakinaig ta ŋakmba kilmba pa suŋgo mbolŋge pankina.

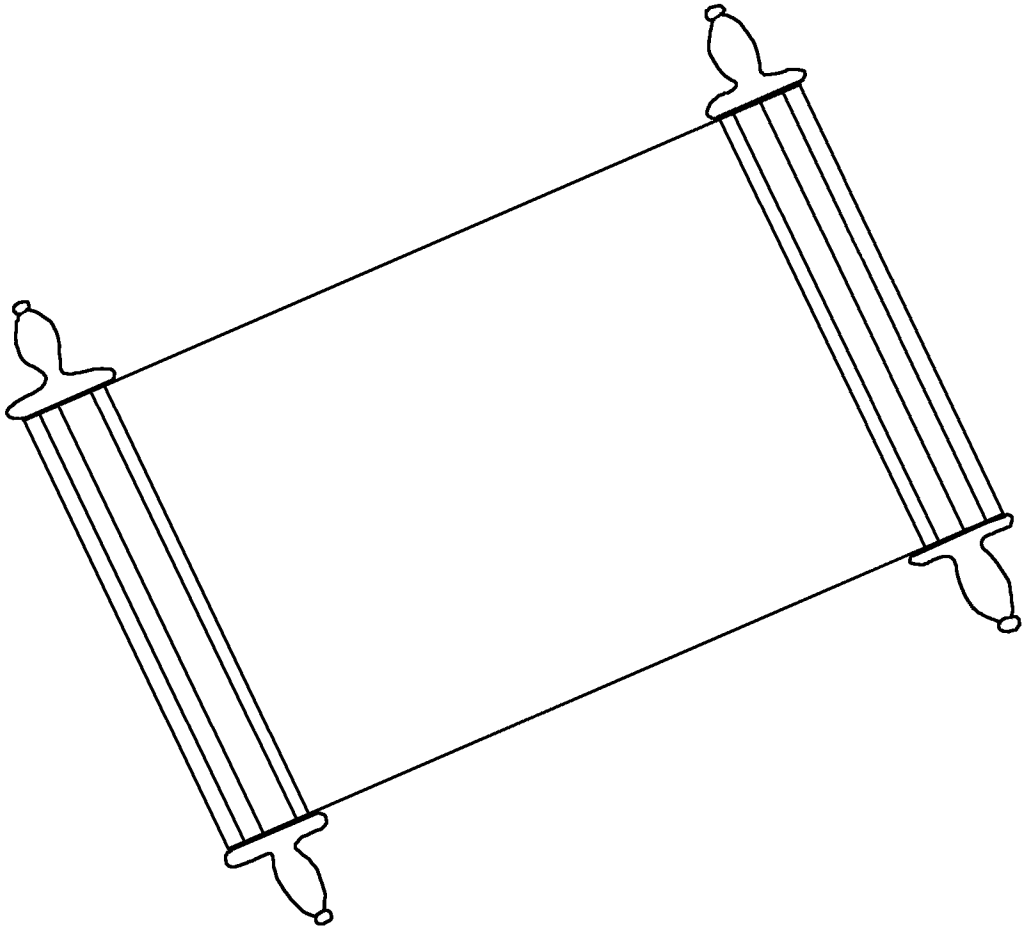

Tukul Guwa le Sipsip Fat piyo nuŋe nale sakade: Ne prowa ŋgade. Nane pasa te isig mbal nane mata ne prowa ŋguwaig. Ande nu kule parawa ndeta nu Yesus tugum ilwa. Ima nu kule nyumba minmba minam tuku nzaliwa ndeta nu kule ta piya kugatok nyuwa.



Kuate nu kilke mbol mbal ŋakmba tuku kume purmba nuŋe Kiŋo nuŋe ndindo niŋgina. Ima nu Kiŋo nuŋe kumuŋ ŋga son ŋgate ta nu ŋgisi ndaka abo ŋak minmba minamŋgat.

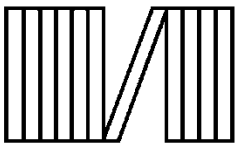

Rom 3:23 Sine ŋakmba une maŋau ke likeg sulumba Kuate am mbolŋge denkanu mineg. Ta tuku sine nu ndoŋ tumawam kumuŋ kuga le

Rom 6:23 Une kumnemŋge pirokade mbal nane piyanu kume maŋau tade. Sine siŋgine Suŋgo Yesus Kristus tuku mbal Kuate nu piya kugatok abo tugu minmba minam tuku siŋgit.

Hibru 9:27 Taŋgo ŋakmba kume nduiwaig sulumba Kuate nu nane pileniŋgam tuku ait tairŋga minamŋgaig.

Efesus 2:8,9 Kuate nu tane ake sinaŋ make patika tane muskil kile-tidiŋgate ta taŋgine piro mbolŋge kuga. Kuateŋge piya kugatok tiŋgit. Taŋgo ŋgarosu payamkubekaig ŋga naŋgine piro mbolŋge nu niŋge ndakate.

Rom 10:9,10 Ne naŋe miŋgembi Yesus nu Suŋgo Ndindo minit ŋga te-mayokmba saka sulumba naŋe ŋgamuŋgalmbi Kuateŋge Yesus kumna le te-tina ta ne son ŋga ta Kuate nu ne tuku muskil te-tiwe tanmbimŋgat. Sine ŋgamuŋgalmbi son ŋgeg le Kuateŋge sine tiŋreknu ŋgate. Sine miŋgembi pasa ta te-mayokeg le muskil kile-tidiŋge siŋgit.

Yohanus 3:16,17 Kuate nu kilke mbol mbal ŋakmba tuku kume purmba nuŋe Kiŋo nuŋe ndindo niŋgina. Ima nu Kiŋo nuŋe kumuŋ ŋga son ŋgate ta nu ŋgisi ndaka abo ŋak minmba minamŋgat. Ta ndaŋam? Kuate nu Kiŋo nuŋe kukulna le kilke te mbol prona ta une tuku pa niŋgam tuku pro ndana. Nu taŋgo pino ŋakmba tuku muskil kile-tidiŋgam tuku prona.

1 Yohanus 5:11-13 Kuate nu teŋenmba sasiŋgit. Ye abo tugu minmba minam tuku tiŋgen. Abo tugu miro ta yiŋe Kiŋo ŋga sakate. Ima nu Kuate tuku Kiŋo tumba nu ndoŋ minit ta nu abo tugu ta mata tumba ŋak minit. Ima nu Kuate tuku Kiŋo nda tate ta nu abo tugu mata nda tate. Tane Kuate tuku Kiŋo tuku saŋgri tomba tiŋgade mbal tane siŋka abo minmba minamŋgaig. Wam ta tane kila palpe ŋga waŋe te tane tuku kuyaret.

Yohanus 14; 2 Korin 5; Dir pasa 4, 21, 22

Storyline by: Edward D. Hughes

Illustrated by: Lazarus
and Alastair Paterson

Adapted by: Sarah S.

Siroi Bible (ssd) © 1999, Wycliffe Bible Translators, Inc. All rights reserved.

https://www.bible.com/bible/1280/GEN.1.SSD

©2026 Bible for Children, Inc.
www.M1914.org www.bibleforchildren.org