www.BibleForChildren.org

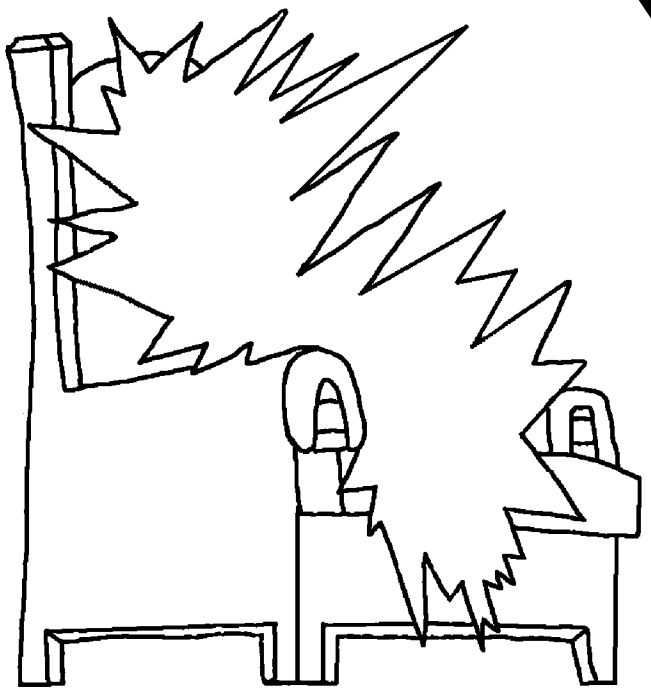

YOHANES 14

Ne Yesu ɔɣere ma sɔ, “Midaati mikpakpa, mifɔ ɣaa miɖe si mifɔ me wũ miɖe. Kuwekɔ̃ gbodzoo pia i Tete iyo ame, ne ɔso losɛ loaledza kɔ̃ losɛ mi. Si iise ngbɔ ne, loibaɣere mi. Si loɔsɛ loaledza kabokɔ̃ losɛ mi ne, loakpese loba loakɔ mi sɔ ngbegɔ lopia ne, mi wũ miawe i mmɔ.”

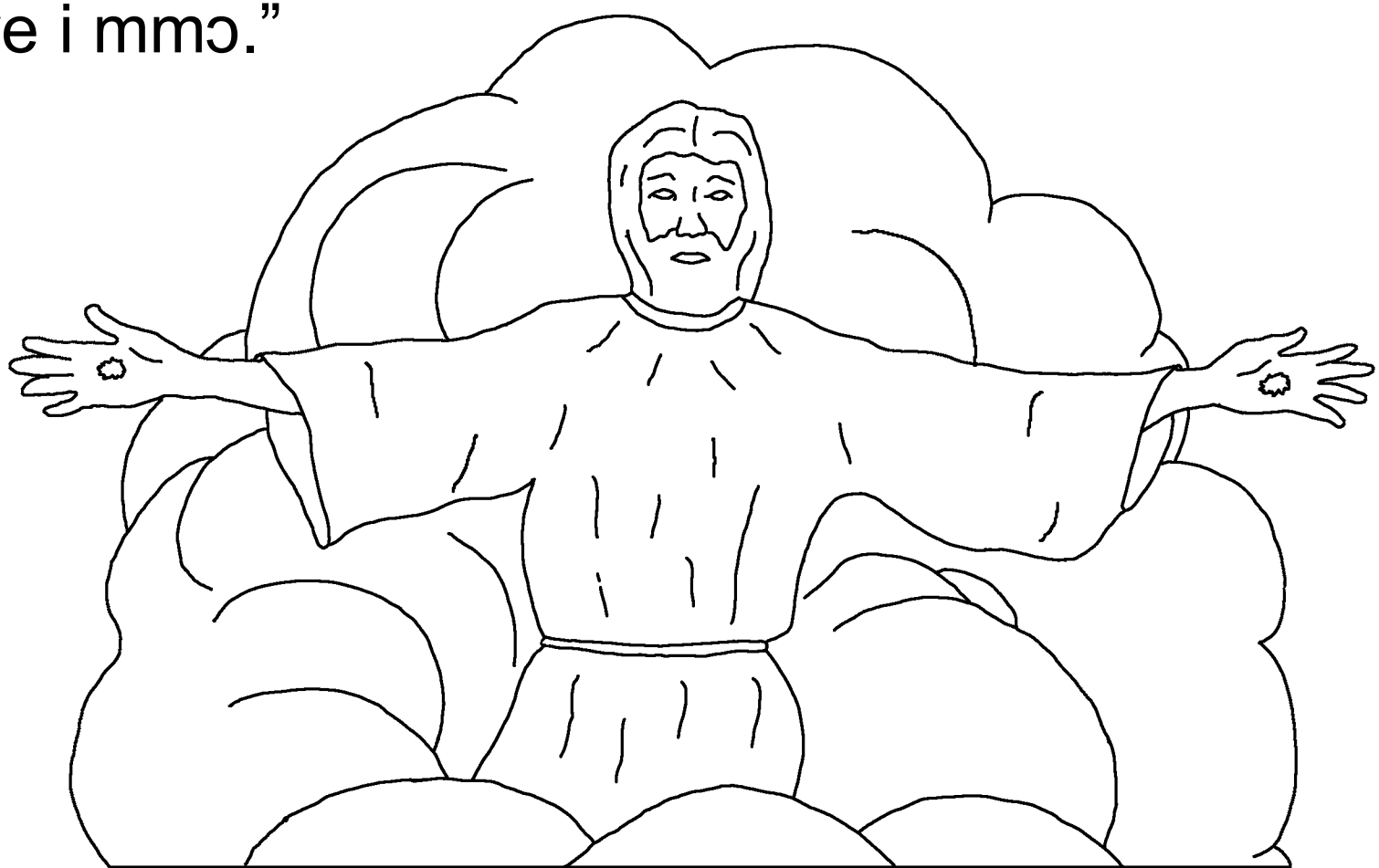

Mme, mi ɔnyii Yohanes gɔ mi gu wũ losiai Yesu fiɛ bosɛ boɣara so i inyɛwe ame ala ɔ̃ sigarakaɖekɔ̃ ɔso, mme nto loɣɛ itɔ̃me nɛgbe. Mamɔɛ̃ me masɛ maasɛ i karɔ̃ ga i ndu ɔki milɔ fiɛ marɔ kã sɔ Patmos iso alasɔ



loto loɣɛ Ɣaa Itɔ̃me gu ɔnukuare gɔ i Yesu ɔɖi ɔte iso.

Ɔluwɛ̃ ne, Ɣaa Siwarã ɔbo i wũ ame lonya sigaraiyara i kato nɛ iso i ɔwɛ̃ si.

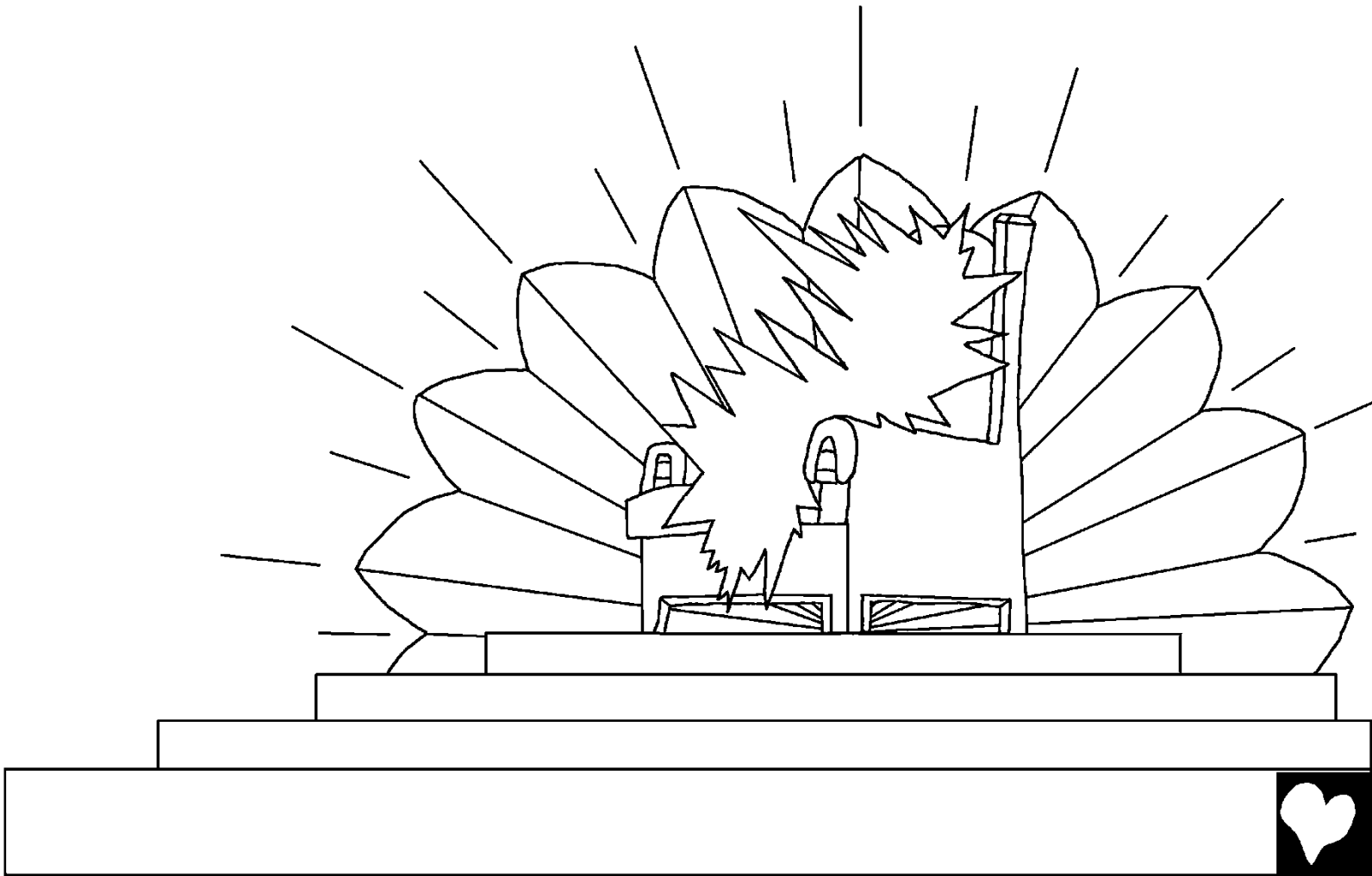

Ne lonɔ ara wa ɔɖuɖu i ɣaa ɔbara, nwa mpia i kato gu karɔ̃, karɔ̃ ame, ɔpo ame gu ara wa ɔɖuɖu mpia i wã ame to aɣɛ sɔ, “Ngɔ nsi i sigaraiyara iso gu Sɛrɛrerɔ̃ Ibi ɔkpɛ nɖe ile, kuwarɛ, ikpawaĩ gu ɔle kayi daaro.”

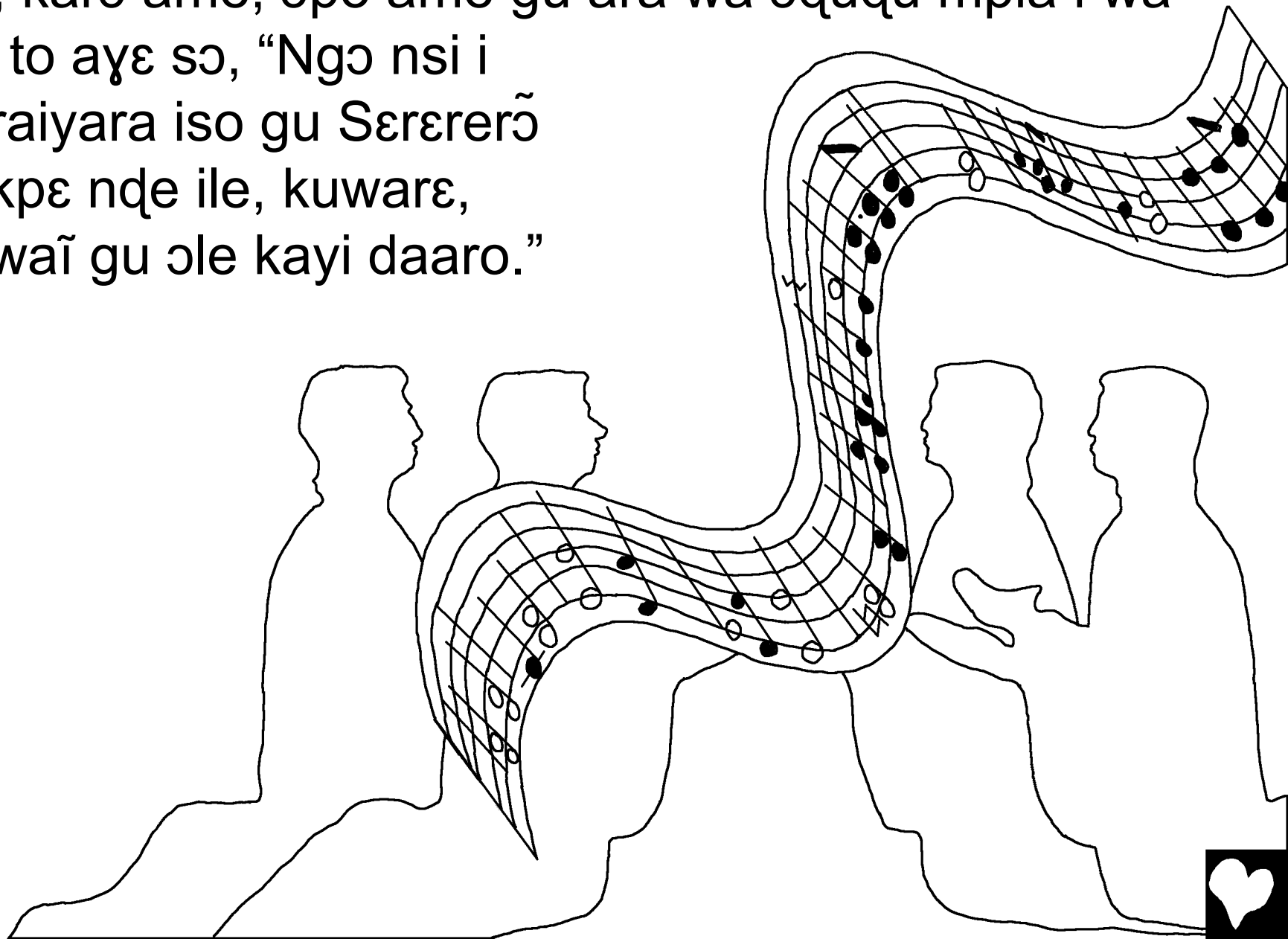

Ne lonya Yerusalem ɔmagɛ̃ ɣɛtɛ sekelea ɔso ɔbɔrɛ i Ɣaa kɔrɛ ɔto ɔba. Makɛrɛ wũ lɛ ɔrɔ̃go gɔ makɛrɛ matã kurã iyiri. Ne lonɔ silɔ siare siwɛ̃ ɔbɔrɛ i sigaraiyara kɔrɛ siɣɛ sɔ, “Minyɔ! Ɣaa kasɛkɔ̃ ka kapia i maturi ndɛ̃. Ɔawe i ma ndɛ̃ fiɛ maaɖe ɔ̃ kaɖe. Ɣaa mɔmɔ aawe i ma kɔrɛ fiɛ ɔ̃aɖe ma Ɣaa.”

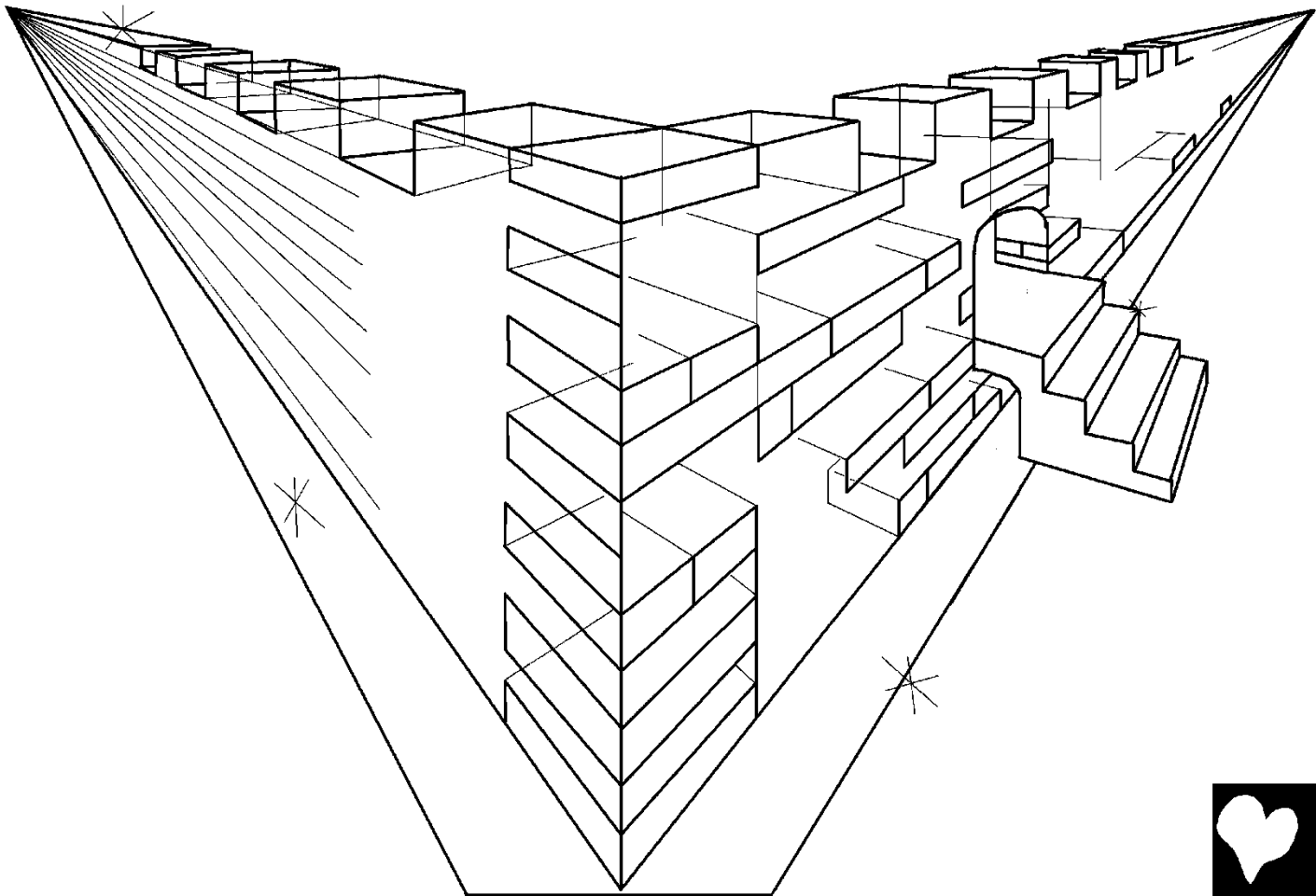

Ne kama ne, Ɣaa kpabo gɔmɔ ɔte me ɔwore gɔ ame ndu nsɛ mitã ngbã. Ndu ɔrɛ kpɛnɛnɛnɛ lɛ aɣɔɣɔɛ wa ame losekele gbaã. Ɔwore gɔgbe ɔgɔdɛ̃ ɔbɔrɛ i Ɣaa gu Sɛrɛrerɔ̃ Ibi sigaraiyara ame.

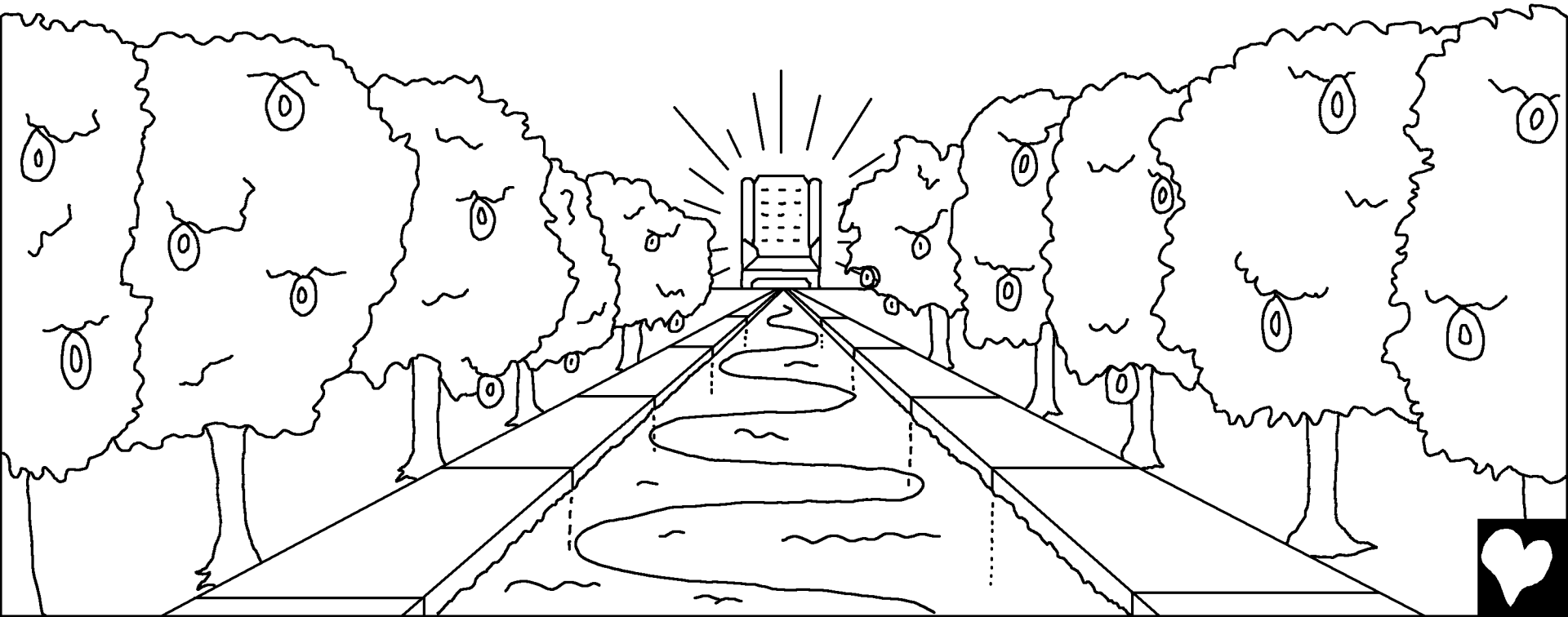

Kuɣɛ̃ ɣee ɔgbaworeti iinya i ɔmagɛ̃ ame, alasɔ ɣaa ikpawaĩ sɛ ifiɛ ifere wũ iso fiɛ Sɛrɛrerɔ̃ Ibi nɖe ɔ̃ ɔkaniɛ.

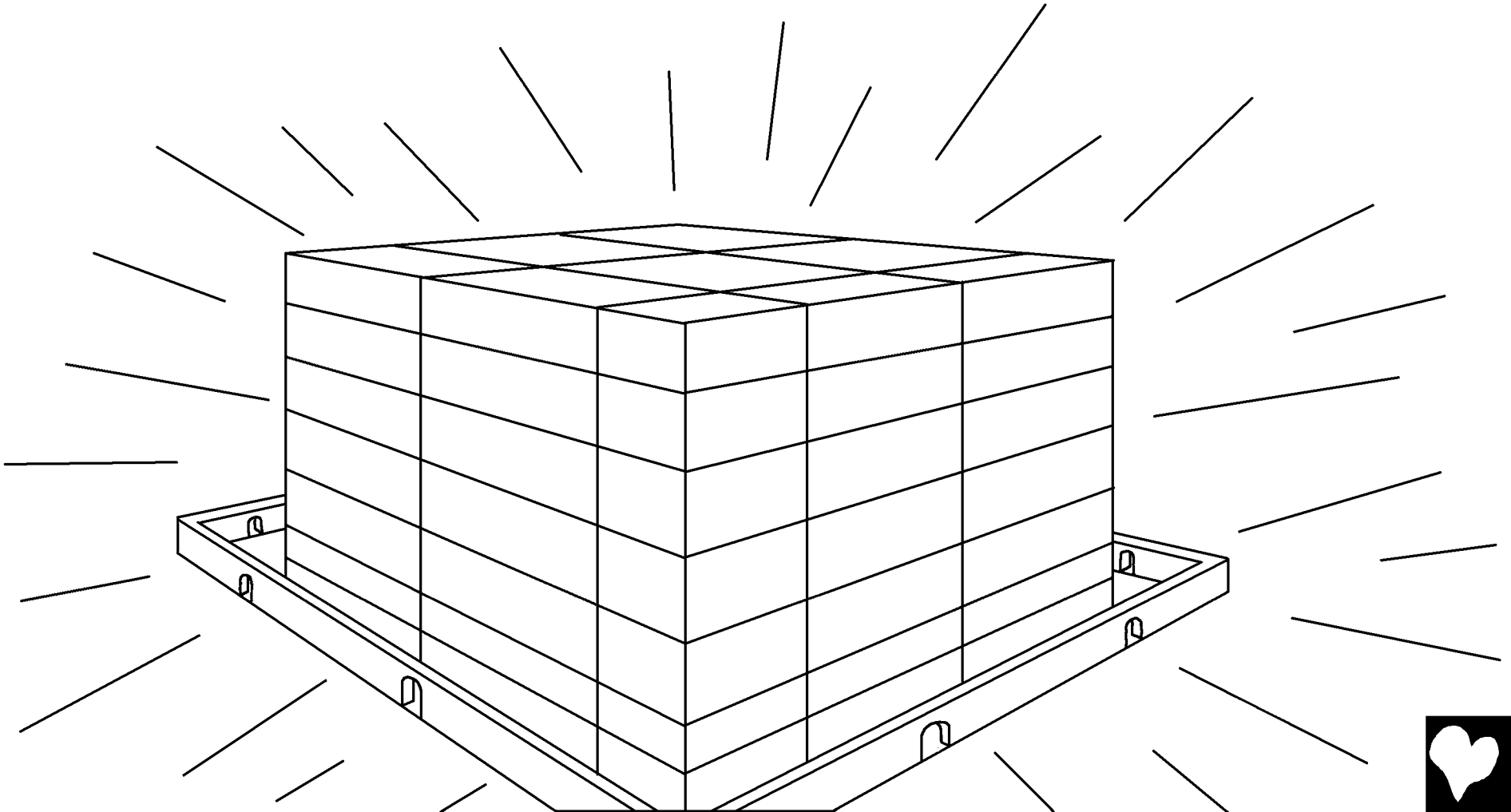

Ɣɛɛ ira nɛ loisekele kuiwɛ̃ iibabo i ɔmagɛ̃ ame. Maladze gu mma nsɛ mabara anuarɛra iibawe i ɔ̃ ame. Mma ayere matsɛrɛ mapia i Sɛrɛrerɔ̃ Ibi ngbã ɔko ame pɛ loawe i ɔ̃ ame.



“Ɔto ɔ̃anukutu ma nnɔmɛ biara i katɔ̃, fiɛ kukpi iisibawe. Ngbɔ ame i imararãso, kaku gu ibo iisibawe alasɔ ara wa lowe ku ɔkpɛ ɖeakatɔ̃ ɔɔfe.”



Maisibanya imusuora kuiwɛ̃ i ɔmagɛ̃ gɔmɔ ame. ɣaa gu Sɛrɛrerɔ̃ Ibi sigaraiyara aawe i mmɔ fiɛ ɔ̃ maɖabo aasɔrɛ wũ. Mato maanya wũ katɔ̃ fiɛ ɔ̃ iyere to iasia ma i atɔngbo.



Lonya makpise, maturi nyaa gu mma loinya gɔ maɣɛ i sigaraiyara katɔ̃. Mabusi siko, fiɛ maledza ɔko mama ibusi, ɔ̃ nɖe ngbã ɔko ne. Masu ara wa matsɛrɛ mapia i siko ame maɣɛgu makpise atɔ̃me i ma kurabarara kanya. Ɔbiara gɔ iyere mainya matsɛrɛ i ngbã ɔko ame ne, masu wũ mafuĩdza mapia i itɔkpe siare ame.

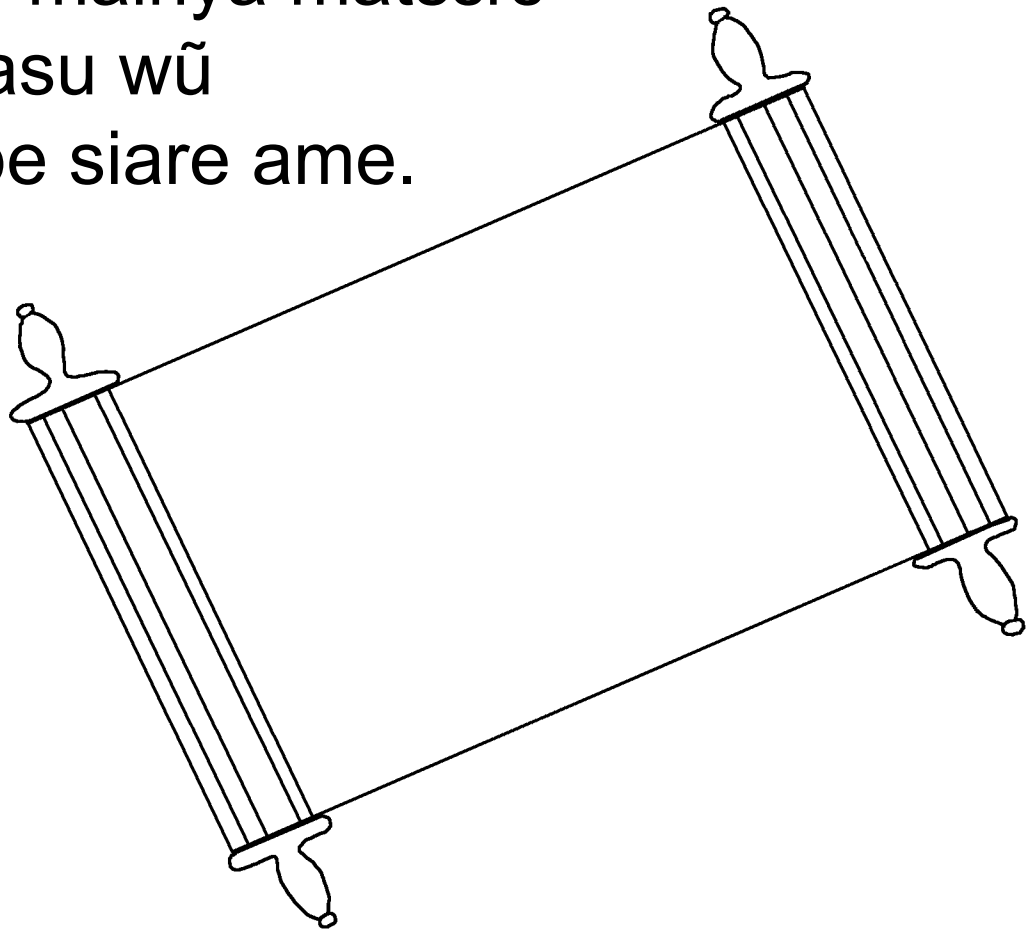

Ɣaa Siwarã gu ɔrɔ̃go gɔ mato makɔ ɔɣɛ sɔ, “Ba!” Ngɔ nto ɔnɔ ana si ɔɣɛ sɔ, “Ba!” Ngɔ i ɔme to ɔkore si ɔba ɔ̃afɔ ndu mɛ loatã ngbã ɔnɛ kuso idaatã.

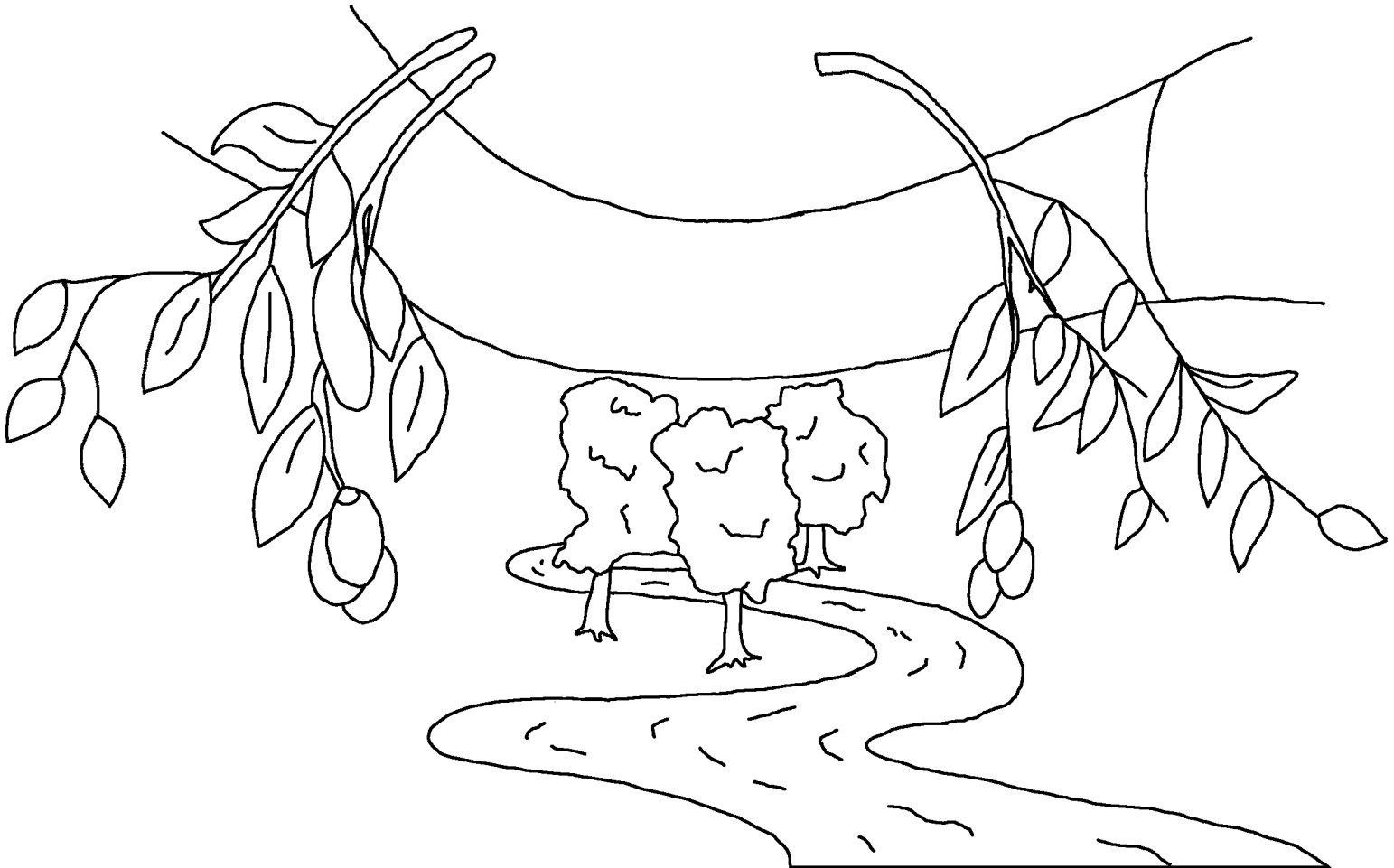

Alasɔ ɣaa ɔbua ɔto ɔqɔɛ kayiiso maturi sɔ ɔsu ɔ̃ Ɔbi ɔwɛ̃ saã ɔtã sɔ ɔbiara gɔ lofɔ wũ ɔqe ne, ɔ̃ibawɔ, ɣɛɛ ɔ̃ana ngbã mɛ loisɛ miro.

MA ROMASE 3:23 Maturi ɔqudu ɔbara ikpi. Ne ɔso maikote sɔ maabore mabo ɔ̃ ikpawaĩ.

MA ROMASE 6:23 Alasɔ ikpi kusia nqe kukpi. ɣɛɛ ɣaa nnyainyɔ ne, iatã bo ngbã mɛ loibaro minya iki Kristo Yesu gɔ nqe Bokɔse iso.

MA HEBRISE 9:27 Ipia sɔ ɔbiara aakpi ɔkpɛ ɔwɛ̃ saã, ne kama ne, ɣaa aaɣɛgu wũ atɔ̃me.

MA EFESOSE 2:8,9Abualɛra ɔsokere ɔfɔmi iki i kafɔkaqe ame ne iiqe isɛɛ kuiwɛ̃ nɛ mibara ɔso, ɣɛɛ ɣaa karatã kaqe. Iiqe kuwɛ̃ kubɛ ipia ame ibɔrɛ sɔ ɔ̃asu ɔqe ndamu.

MA ROMASE 10:9,10 Si abusi fɔ kanya aɣɛ sɔ Yesu nqe Bosate fiɛ afɔ aqe i fɔ ɔtu ame sɔ ɣaa ɔtara wũ ɔbɔrɛgu i makpise ame ne, ɣaa to ɔ̃atã-ɔ ngbã. Alasɔ fɔ ɔtu ame iqe aafɔ aqe fiɛ aase bɔlɔlɔ i ɣaa anɔ, ɣɛɛ fɔ kanya aasu abusi fɔ kafɔkaqe ate fiɛ aana iqi.

YOHANES 3:16,17 “Alasɔ ɣaa ɔbua ɔto ɔdɔɛ kayiiso maturi sɔ ɔsu ɔ̃ Ɔbi ɔwɛ̃ saã ɔtã sɔ ɔbiara gɔ lofɔ wũ ɔdɛ ne, ɔ̃ibawɔ, ɣɛɛ ɔ̃ana ngbã mɛ loisɛ miro. Alasɔ ɣaa iipia ɔ̃ Ɔbi sɔ ɔba ɔ̃atã kayiiso maturi ipɔ, ɣɛɛ sɔ si ɔba ɔ ˜adɛ ma Ðidze.”

1 YOHANES 5:11-13 Adɛansiɛ ndɛ sɔ, ɣaa ɔsu ngbã mɛ nna katui ɔtã bo, fiɛ ɔ̃ Ɔbi ame i ngbã mɛgbe pia. Ɔbiara gɔ lofɔ ɣaa Ɔbi ne, ɔba ngbã mɛgbe, fiɛ ɔbiara gɔ loifɔ Ɔbi ne, ɔna ngbã. Loto lotsɛrɛ ɔko gɔgbe lotã mi ma lofɔ ɣaa Ɔbi midɛ si mitsue sɔ miba ngbã mɛ nna katui.

YOHANES 14; 2 MA KORINTOSE 5; KAĐIKATE ƆKO 4, 21, 22

Storyline by: Edward D. Hughes

Illustrated by: Lazarus
and Alastair Paterson

Adapted by: Sarah S.

Siwu NT (akp) © 2008, Wycliffe Bible Translators, Inc. All rights reserved.

https://live.bible.is/bible/AKPWBT/MAT/1

©2026 Bible for Children, Inc.
www.M1914.org www.bibleforchildren.org