www.BibleForChildren.org

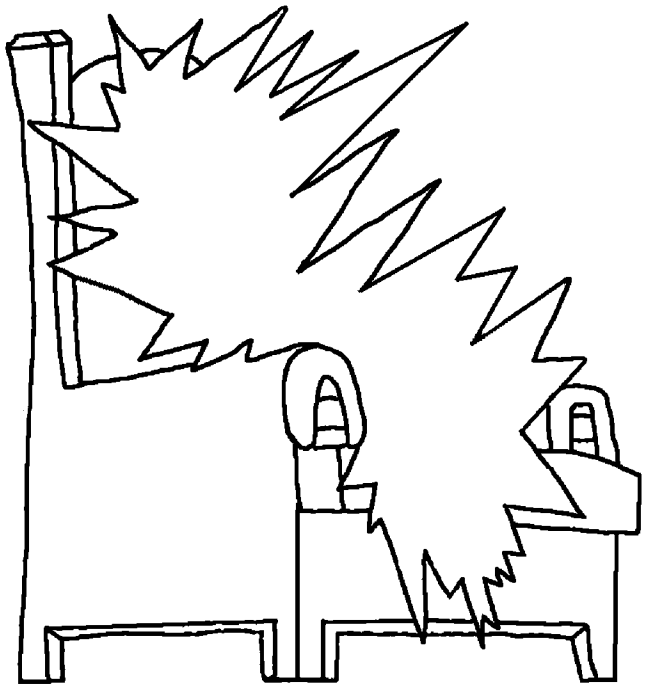

Jon 14

Izek Yẹsụ demezyak waginnek ne, “Ma anyikku zịnzẹtị cuggọk kụụcẹt, abarik aartik zịnzẹtị Tạmụtạddẹn, kar bọdọk aartik zịnzẹtị annita. Anyak ọrgẹ ci Baba cẹẹzị cik meelek, wọyẹ dạ ming kịzzẹc cẹẹzị nẹkẹ to, kụdụwạkkụng wọyẹ dạ. Kokko anna kadimanekkung nginti aavtiyyu.”

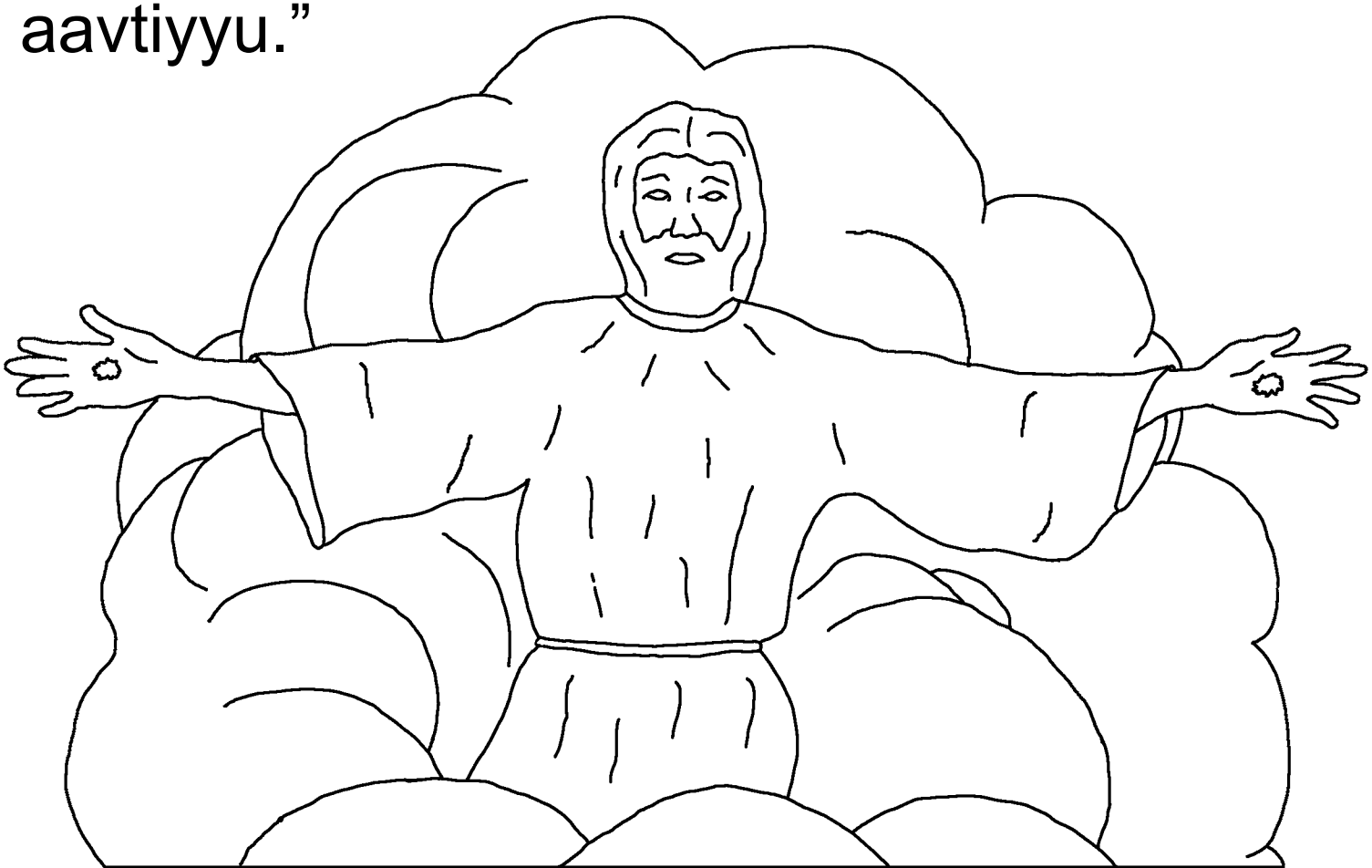

“Ming kuwa kidimanneung lo̲o̲c, koboda atin abunna ming kokko kokkoyyung bu̲k, kar niga bu̲k abait ngati kabahe anna.”

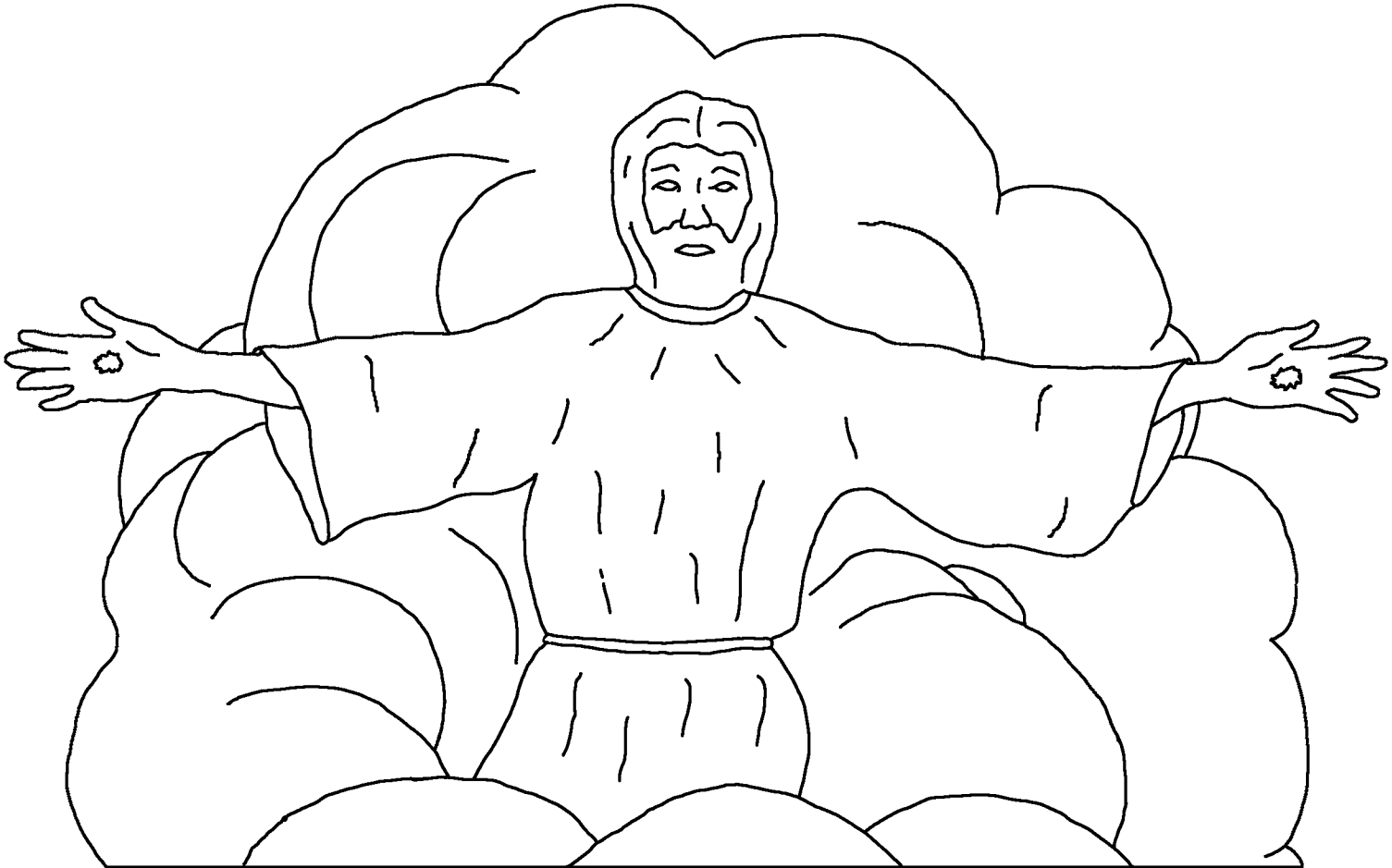

Keeni anna Jon, gotonnu cunnong tuwenta, kozol ki iget pirnanet, ki baalinet ci Tamutaddeno, ki nimenet nongitton zoze ci Yesu. Kaave

baliye anna looce ci aburuk maama een Patmos, kabai ki ci

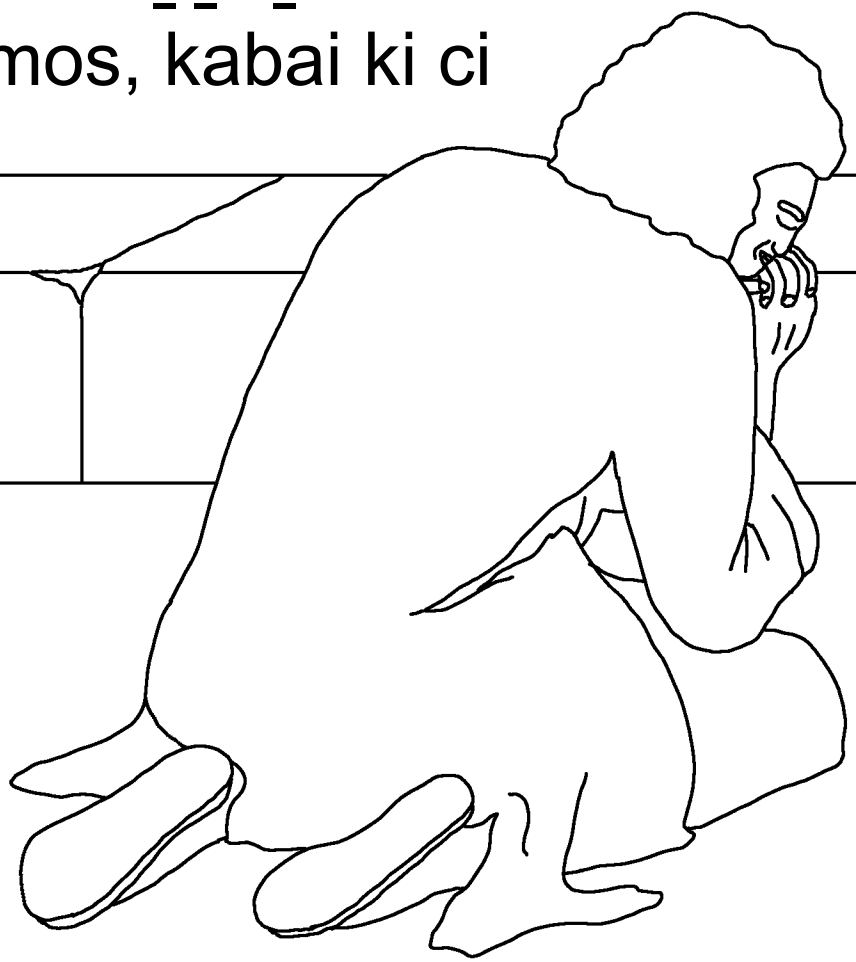

kecebje lagama, eci kuwahek ol zoz ci Tamutaddeno, kibbaci bodok anna zoz ci Yesu.

Ataman niko ikiya Vongizi ci Tamutaddeno kar kuwuya onozowe, bak kacinni ngumę cinanni tamu-kenga lecer ci alaano kar Eeti kavvu lecere neci.

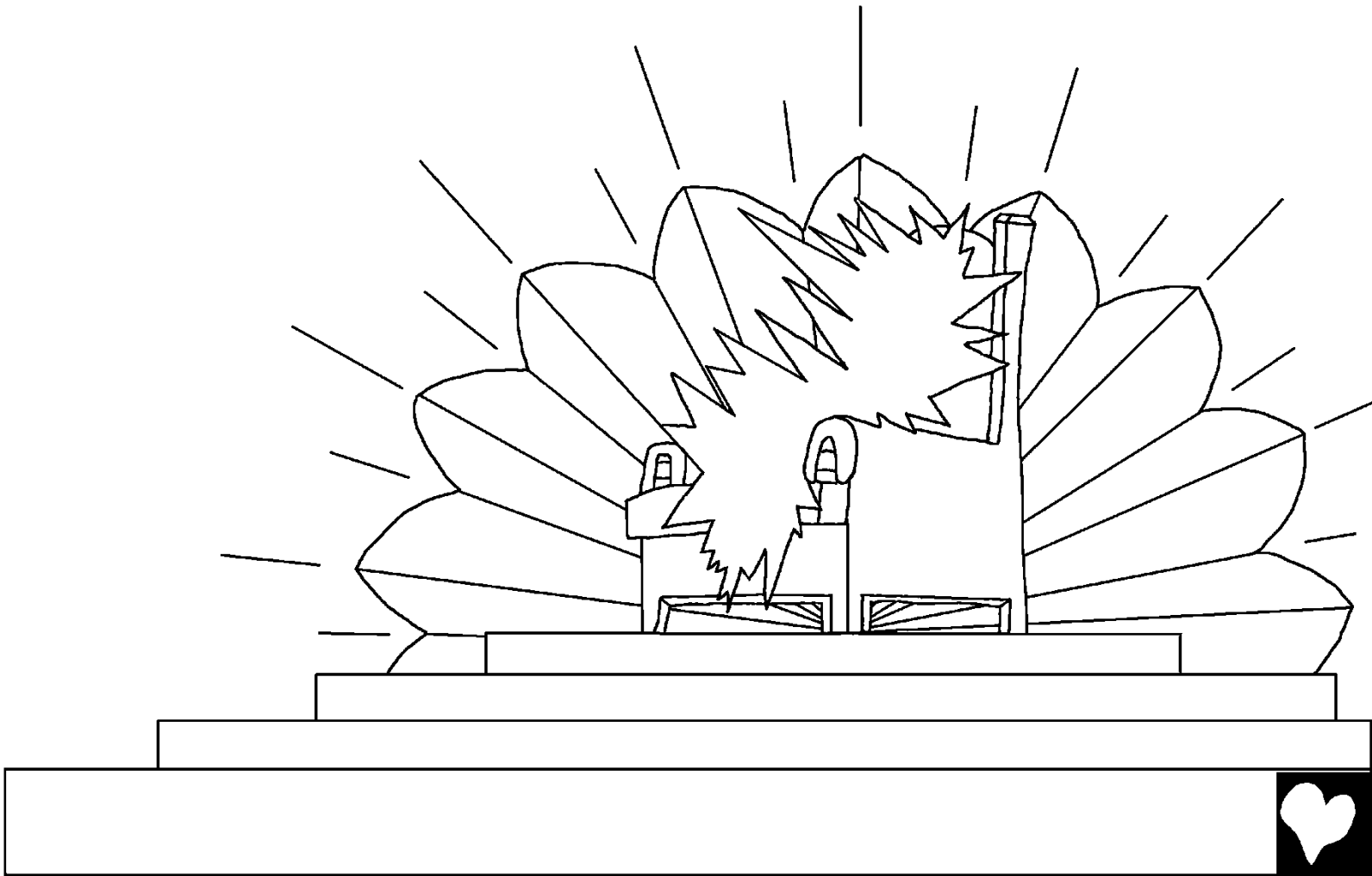

Kiziya zin kaal wak aruge e̱e̱gg̱in we̱c do̱o̱k ta̱mu̱kenga, lo̱o̱ta̱ ki lo̱o̱c todowai ecito nyatapare ci a̱ddi̱ki̱re̱, ki kaal cik aruge lo̱o̱ta̱ do̱o̱k ming e̱be̱ne̱: . . .

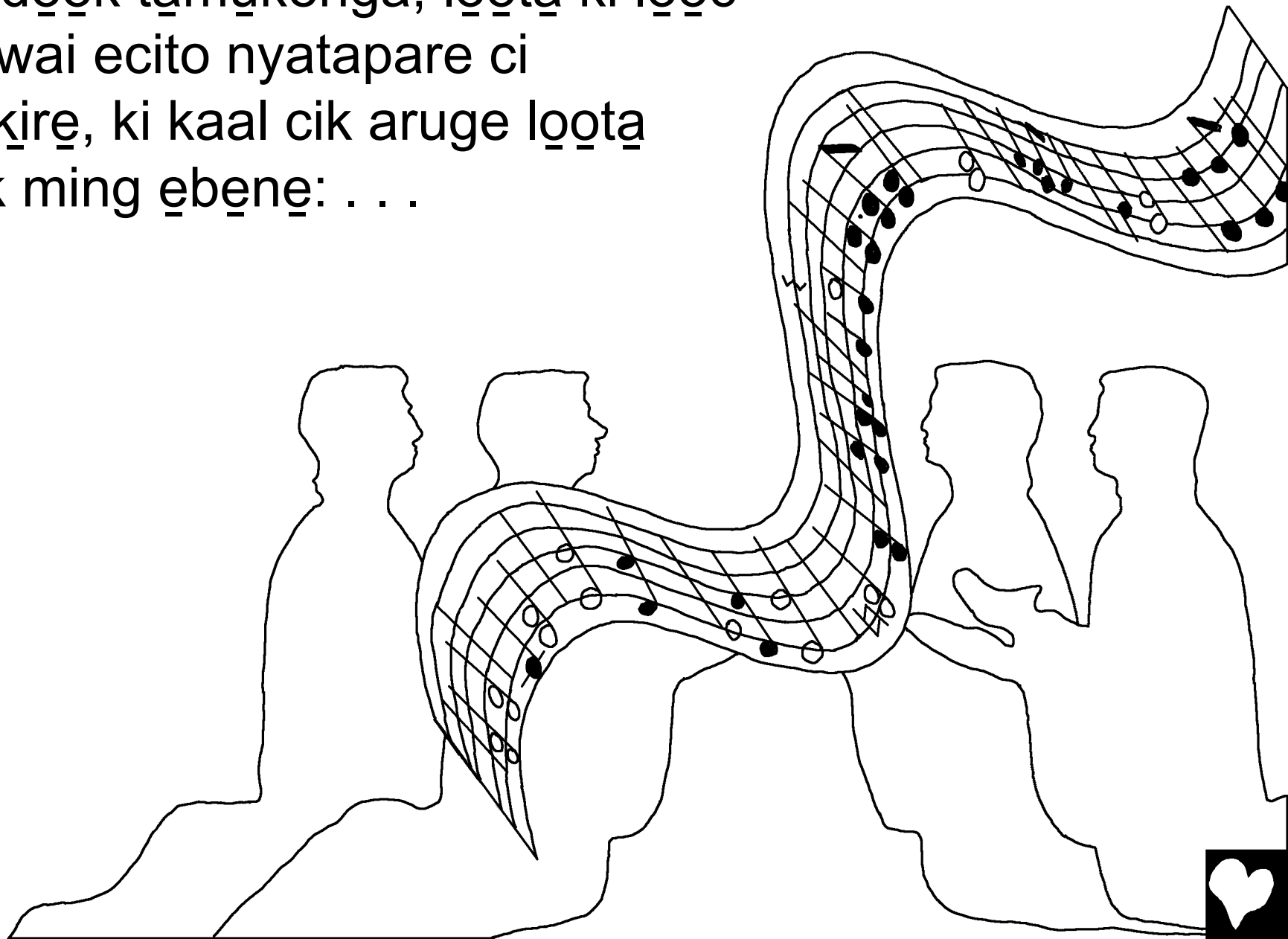

. . . “Kanyikka inatinet ki ngolinet, ki dingdingon eet ci aave lecera ko ki Nyoon kinnatit nonno kar kotongooltte nonno kar idingdingannit nonno wa anyak komiz ci abale enne ol udut!”

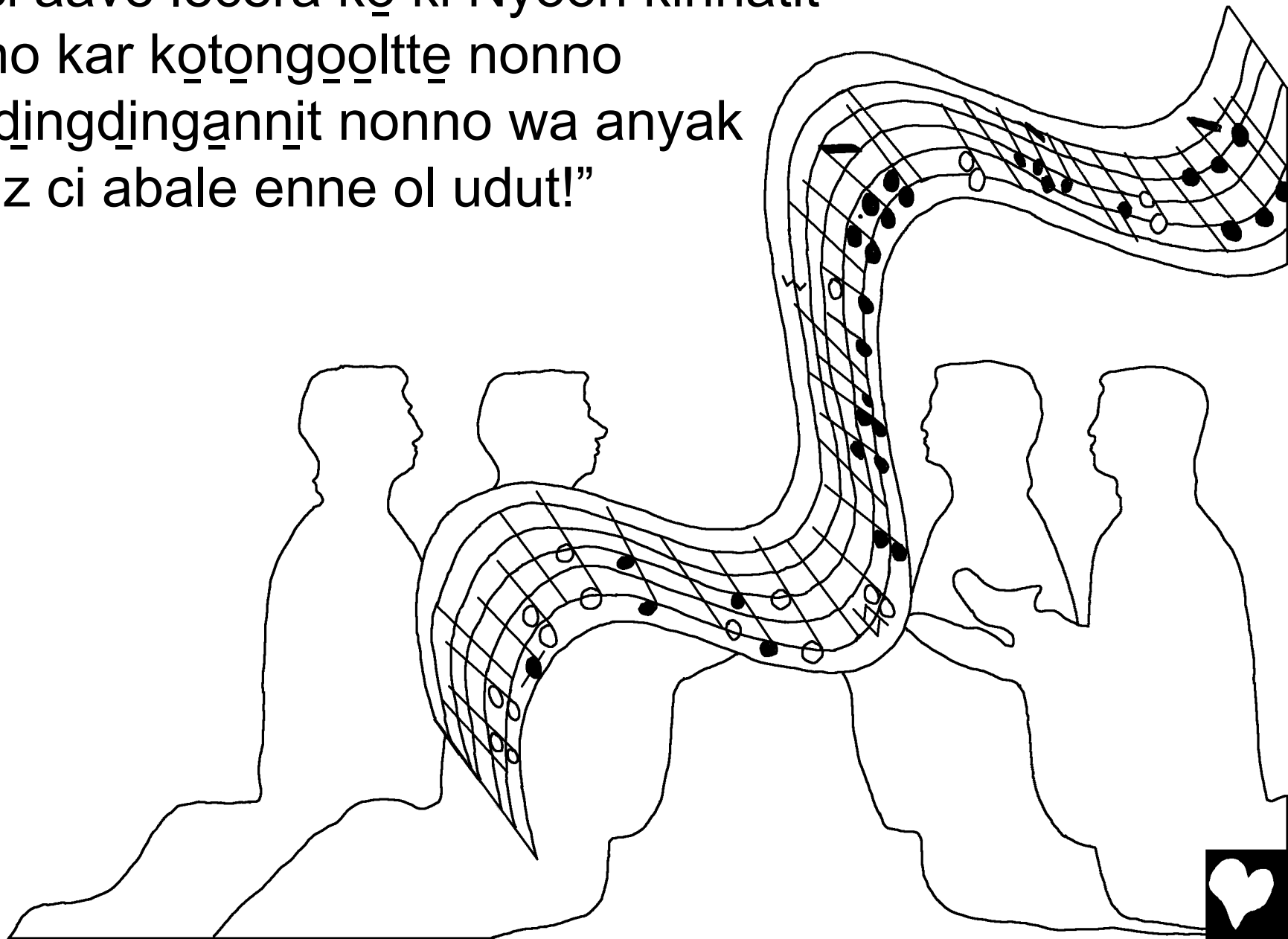

Kedenya orog ci Alile, een Jerusalem ci een jor, iyowa tamu-kenga ngati Tamutaddeno, kar zin kidiman ele ogon ki nyatirani ci aime kizizi kicin mac cinne. Kar anna kizik muluk ci abule akku lecera, azi ne, “Iyoko aave nginti abahe Tamutadden olle, kar atin enne kabak ki nogo. Ovvo atin nege eeggin ol ciginnek, okko atin Tamutadden eliya abak ki nogo kar enne kize Tamutadden cinneng.”

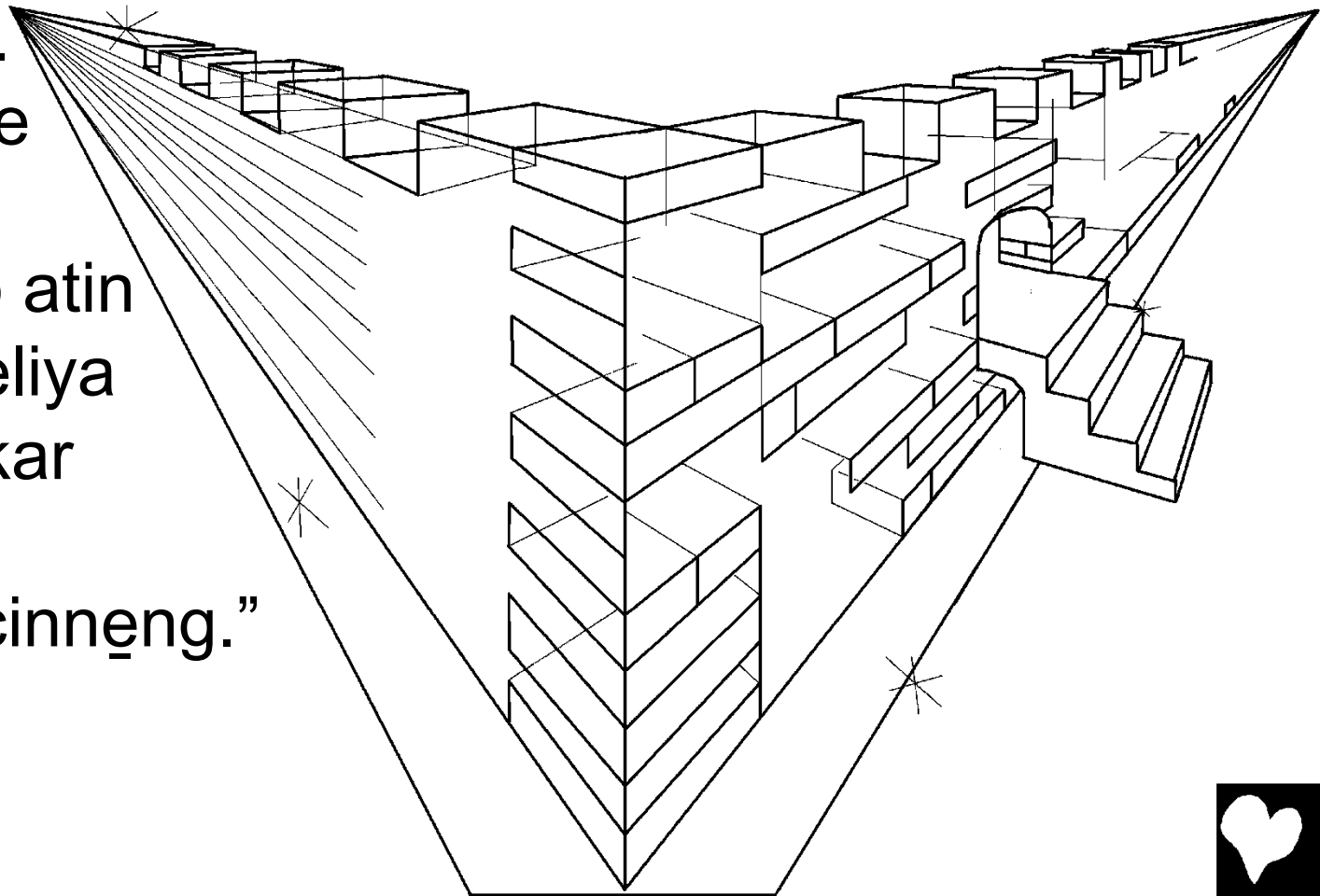

Iyeleya zin anjilo liil wa arik maama cik rugeto cik caalek paz, ariya lecere ci Tamutaddeno ki ci Nyoono, okko orgene ci gool ci orgu addikire.

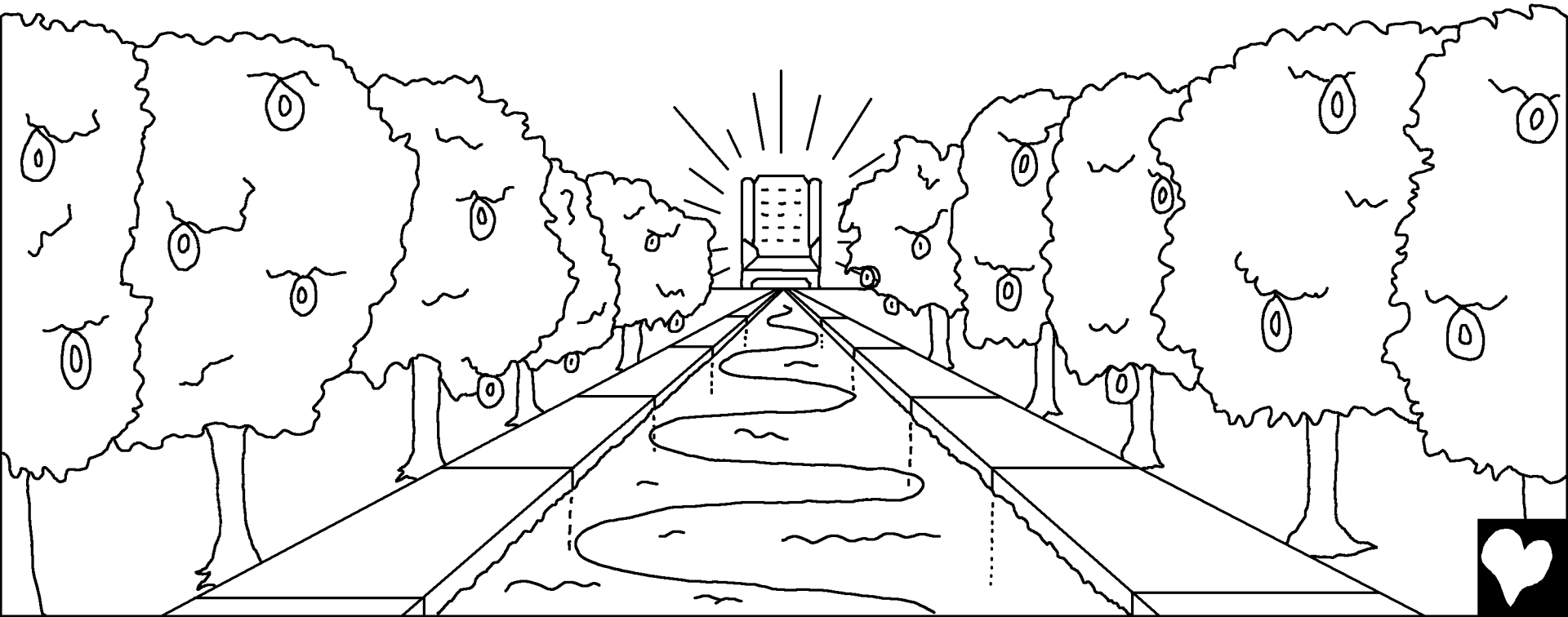

Iróng orogi orong ii icima nyelok kar kataran looc, marrit dingdingoni ci Tamutaddeno ataran looc, okko Nyoon een urez cinne.

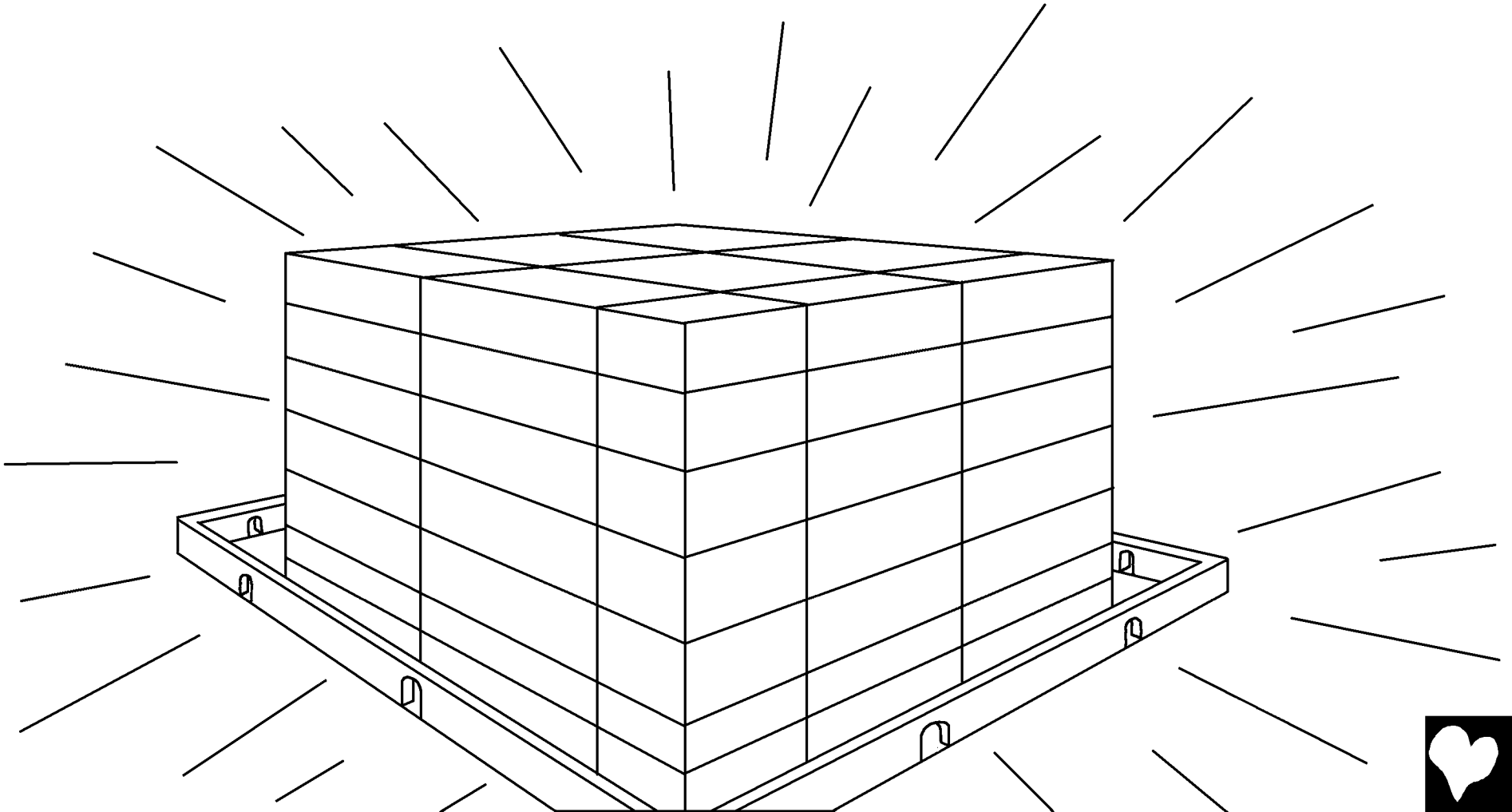

Illoi atin gii imma ci anyak munyen kar kitto ngin neci, icima iizo eeti imma ci ogon kaal cik gerzek, abarik iizo ol cik eheryę zara ciggek buwe ci Nyoono rugeto do niko cik aavtte orgę neci.



“Avila atin enne tilalo eberene ciggek. Izzi atin bodok daizi to icima mozinet icima uluwa icima uucez, eci kaala balik reentik ke izzec to ne dakdak.”



Izzi atin torinet imma to orge neci udut. Aave leceri ci Tamutaddeno ki ci Nyoono orge neci, kar duccaha ciginnek kalac nonno. Acin atin nege ngum cinne ele, kar zin atin zara ciginnek keteherte ngumttinne ciggek.



Kar zin anna kicin ol wak ạdạitọ, cik ạddịkịrẹ ki cik kidik bụk, abile nege ọọwẹ ci lecero, ọọyẹ zin buwani. Oowe zin bui imma, een neci buk ci rugeto. Ettedozik lọkịkọ ol wak ạdạitọ gọọlẹ bali ogone nege kaal ki ming ẹhẹryẹ buwanine. Ming iróng zara cik ẹẹt imma ẹhẹryẹ buwe ci rugeto, ụjụkọzịk enne kuk gwọọyẹ ci apadpadi oroot kẹ.

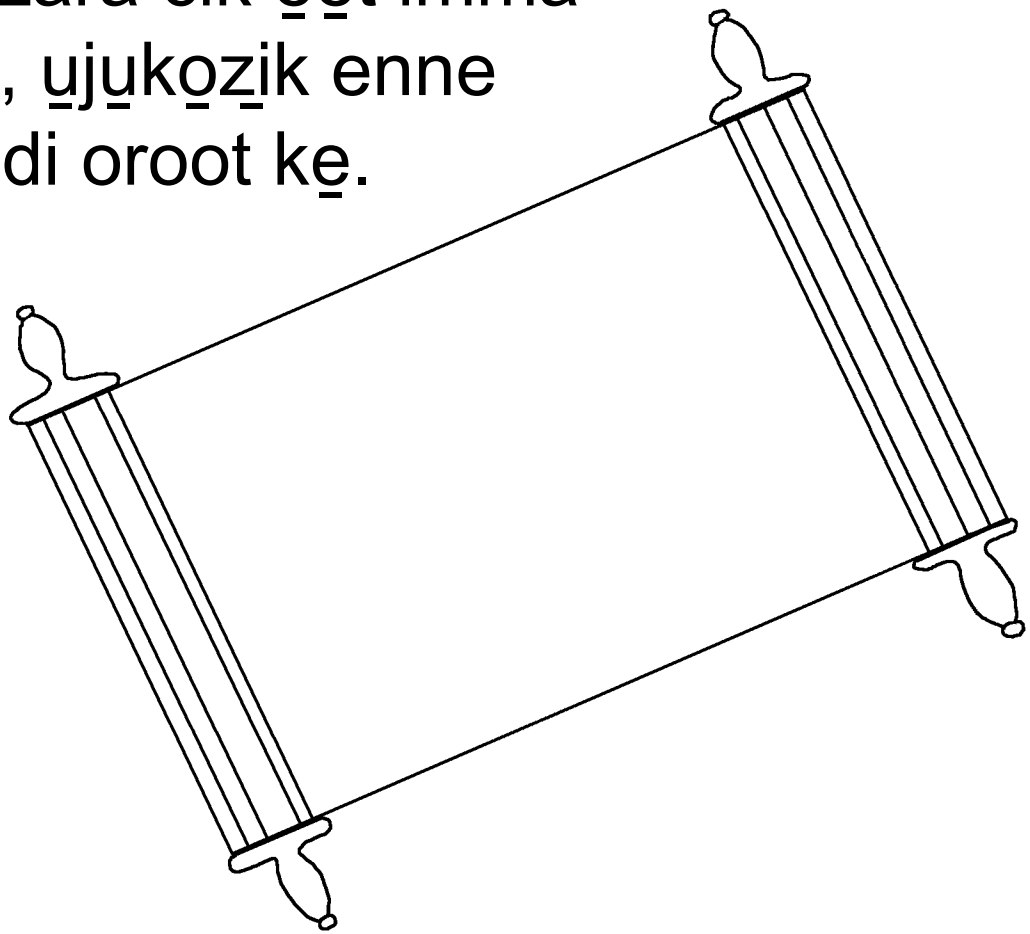

Ize Vongizi ci Tạmụtạddẹnọ ki nyatiran ci Nyoono ne, “Ịjjạ!” Anyik ẹẹt ci aziye kize ne “Ịjjạ.” Ming anyak ẹẹt ci ạrụk koor, anyik nonno kịkịyạ; kar ming orong ẹẹtị imma maam, anyik nonno kidima muci ci maam cik rugeto ollin.

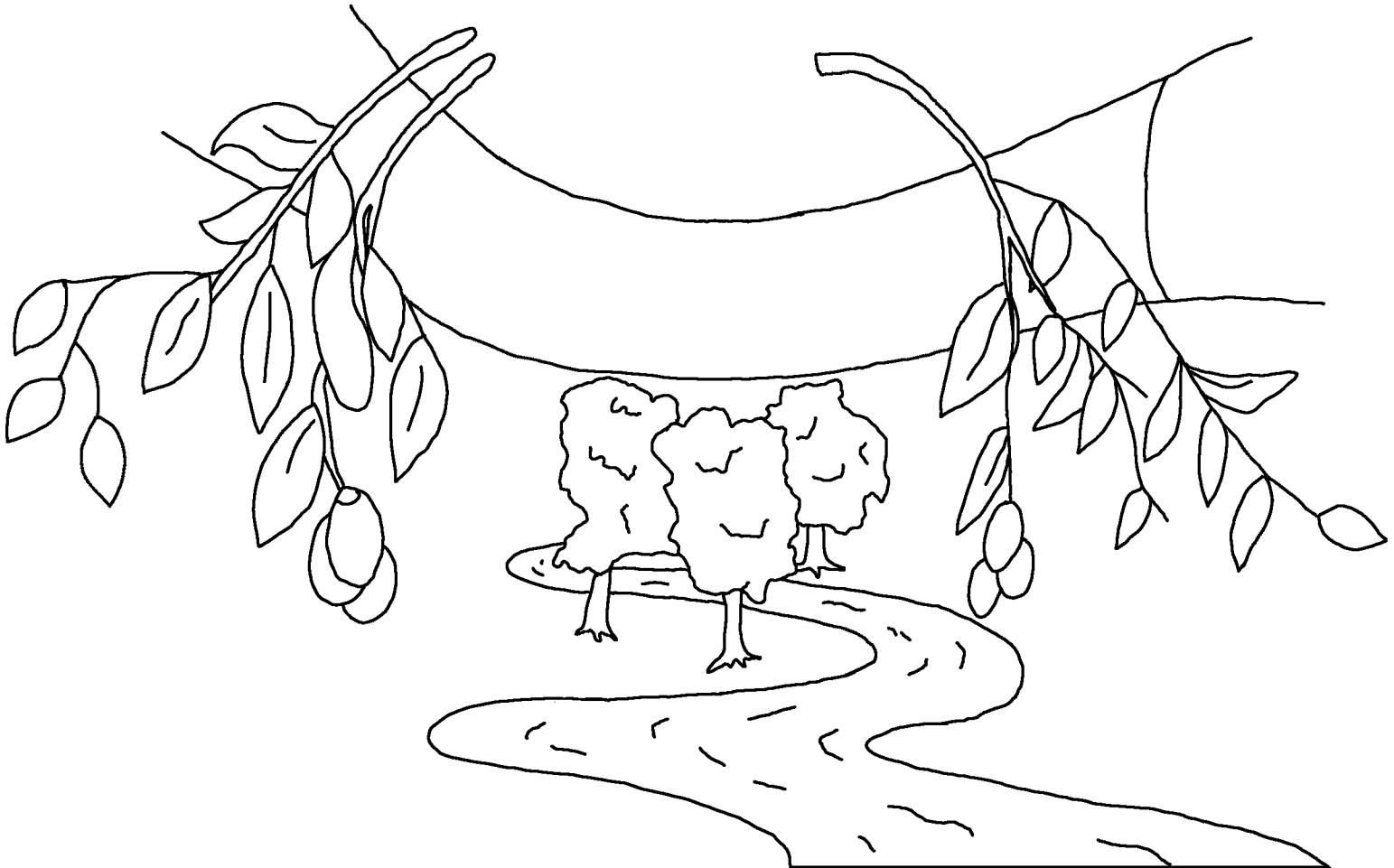

Eci Tamutaddeen irez ol dook oroot,
kar zin kaanyik Ngerinne wa ode tok
niko keela nogo, ming anyak ol cik
atu nonno, amuda atin nege
ruget wa aave udut.

60

Roma 3:23 Eci ol dook anyak bacinnok cik munyenu, iróng zin naga ngen kazuca dingdingon ci Tamutaddeno.

Roma 6:23 Aanyyet munyena daiz, okko zoz ci Tamutaddeno aanyyet baiz ci aave udut ngati Manyitinna Yesu Kiristo.

Iburu 9:27 Izikto da jurrum, ogon zin zoz necu ki ming adai eeti ci diiri arrak, kar vurrta Tamutadden ketted lokiko kaale wak gerzek utugu enne.

Evesos 2:8,9 Kar zin zoze necu, urubtau niga ruget bunnate ci Tamutaddeno tuwenta, nonno ci atirizung oroot kommog baiz cunnong. Een necu muci ci Tamutaddeno ci aanyik eet ci diiri, iróng aanyik goole ci ogone eeti kaal. Iróng een goole ci alinglinge eeti ci diiri, illoi gii imma ci woye odonge eeti ele zoze necu.

Roma 10:9,10 Ming aduwa eeti utuge cinne zoz ci azi ne, “Een Yesu Manyi cinne,” kar bodok eeti kelema zinine cinne zoze ci ingane Tamutadden Yesu daiza, amuda atin enne tirizenet. Eci ming atuwe inna zinine cunne, elemnyi atin Tamutadden ize eet ci abunna, kar bodok ming aduwa utuge cunne een Yesu Manyi cunne, aruba atin inna tirizenet.

Jon 3:16,17 “Eci Tamutadden irez ol dook oroot, kar zin kaanyik Ngerinne wa ode tok niko keela nogo, ming anyak ol cik atu nonno, amuda atin nege ruget wa aave udut. Iróng Tamutadden ittonak Ngerinne looc, kar kikiya ketted lokiko ci ollu, ittona abarik kar kikiya kuruguz ol.

1 Jon 5:11-13 Een necu zoz ci ibbac Tạmụtạddẹn kọ: Aanyet enne agit ruget ci aave udut, ạkkụ rugeti neci ngati Ngerinne. Ming ạtụ ẹẹtị Ngerinne, anyak enne ruget. Imma ming iróng ẹẹtị ạtụ Ngerrti Tạmụtạddẹnọ, iróng enne anyak ruget ci aave udut. Keherakkung anna ịgẹt ol wak ạtụyyụ zar cik Ngerrti Tạmụtạddẹnọ kọ, kar abunna ming ạggạyyụ een rugeti ci aave udut kọ cunnọng.

Jon 14; 2 Korinto 5; Onozzok 4, 21, 22

Storyline by: Edward D. Hughes

Illustrated by: Lazarus
and Alastair Paterson

Adapted by: Sarah S.

Tennet Bible (tex) © 2018, Wycliffe Bible Translators, Inc. All rights reserved.

https://live.bible.is/bible/TEXWYI/GEN/1

©2026 Bible for Children, Inc.
www.M1914.org www.bibleforchildren.org